Plug - with screw terminals one piece housing

Product description	
BALS-Prd.-Nr	21000-TLS
EAN	4024941192354
product category (PG)	TLS plug with Multi-Grip cable gland
current (A)	16A
number of poles (P99)	3p
number of poles (P)	2P+PE
position of earth contact (H)	4 h
voltage (V)	100 up to 130V
frequency (HZ)	50 and 60Hz

Bals Elektrotechnik GmbH & Co. KG D-57399 Kirchhundem - Albaum
phone: +49(0)2723/771-0 / fax: +49(0)2723/771-177 / email: info@bals.com

Product description	
protection degree (SA)	IP44
colour code 1 (KF1)	yellow RAL 1012
Colour of appliance	Enclosure yellow RAL 1012, Cable gland grey RAL 7035
connection design (AT)	with screw terminal
maximum conductor size (LQ)	2,5 qmm
cable entry (KE)	Cable gland
Height	143mm
Width	54mm
Depth	59mm
material of enclosure (GM)	Polyamide
contact	The contact carrier is made of polyamide, The contacts are brass

Additional technical information	
	one piece housing, Multi-Grip cable gland with gasket and integrated strain relief, For cable diameter from 8 up to max. 18 mm

Logistics data	
Weight/pcs	0.136 kg / Piece
Packaging	Bag
Content amount	1 ST
EAN	4024941192354

Bals Elektrotechnik GmbH & Co. KG D-57399 Kirchhundem - Albaum
phone: +49(0)2723/771-0 / fax: +49(0)2723/771-177 / email: info@bals.com

Logistics data	
Length	59 mm
Width	54 mm
Height	143 mm
Weight	0.137 kg
Volume	455.598 ccm
Packaging	Carton
Content amount	10 ST
EAN	4024941841559
Length	207 mm
Width	162 mm
Height	142 mm
Weight	1.46 kg
Volume	3,750 ccm

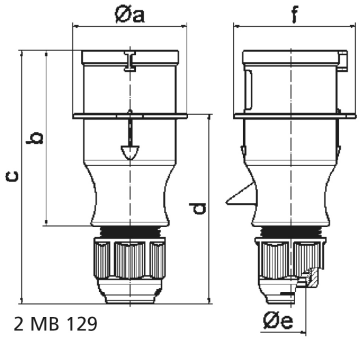

Ampere Polzahl	16 3	16 4	16 5	32 3	32 4	32 5
a ø	54,0	60,0	66,0	71,0	71,0	80,0
b	94,5	98,0	101,0	115,0	115,0	119,0
c	138,0	142,0	145,0	170,0	170,0	174,0
d	101,5	105,5	108,5	124,0	124,0	128,0
e ø	18,0	18,0	18,0	23,0	23,0	23,0
f	56,6	64,0	71,0	76,0	76,0	85,0
Leiter mm² min	1	1	1	2,5	2,5	2,5
Leiter mm² max	2,5	2,5	2,5	6	6	6

Bals Elektrotechnik GmbH & Co. KG D-57399 Kirchhundem - Albaum
phone: +49(0)2723/771-0 / fax: +49(0)2723/771-177 / email: info@bals.com