CB-INL-TED150-CAB0.5 |
Casambi Trailing Edge In-line Dimmer, Enclosed



A trailing edge mains voltage dimming unit controlled via the wireless protocol of Casambi supplied in an electrically safe enclosure.

Designed to be wired as an in-line wired device pre-fitted with out-going cable for connecting between the incoming power and the light fitting.

Key Product Features:

- Easy access lid/clamp to the fast push-fit terminals for the incoming power connections
- Pre-wired 0.5m cable free end for connection to the light fitting
- 2 x holes for mechanical secure mounting.

Wiring

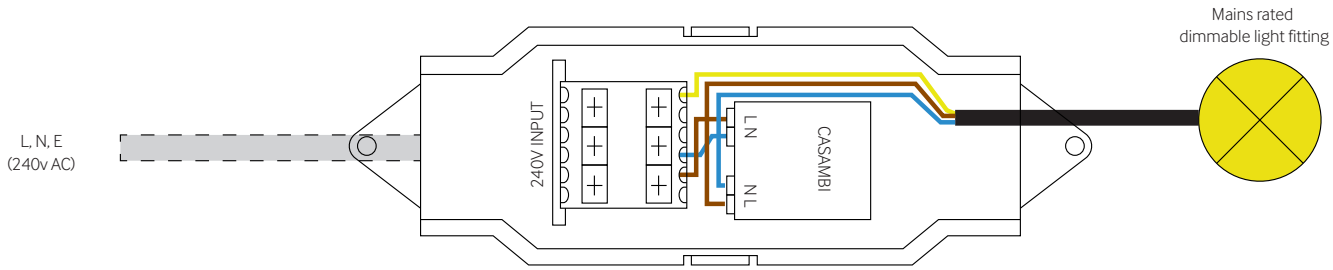

Cut out diameter (mm)

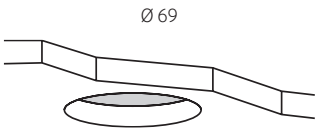

Dimensions (mm)

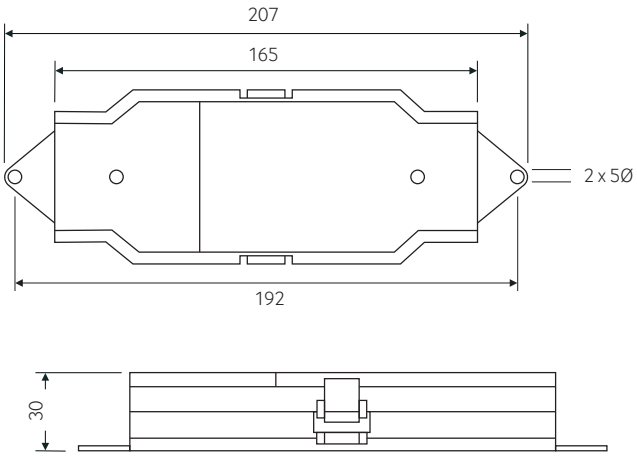

5 YEAR WARRANTY · UK DESIGN · SUITS LED

A brand of legrand

Technical Data

Part Code	CB-INL-TED150-CAB0.5
Weight	<50g
Supply voltage AC	85 - 240v
Supply Frequency	50/60Hz
Rated current	0.65A
No-load standby power	<0.3W
Terminal capacity	Solid & stranded 0.5 - 1.5mm^2 16 - 20 AWG
Dimming method	Trail-edge phase control
Load rating	150 VA @ 230 VAC 75 VA @ 120 VAC
Incandescent and mains halogen	150VA
High quality dimmable LED lamps	150VA
High quality CFL fluorescent lamps	150VA
Trailing edge dimmable LED drivers	150VA
Low voltage halogens electronic transformers	150VA
Mains voltage LED lamps	150VA
Fluorescent, non-dimmable LED & CFL lamps	N/A
Inductive loads	N/A
Maximum output current	0.65A
Minimum load requirement	1W*
Maximum inrush current	10A, 100ms
Transceiver frequency	2.4 - 2.483 GHz
Transceiver power	+4dBm
Working temperature range	-20 to 45°C
Humidity	80% non-condensing
Cutout diameter	69mm
IP rating	IP40
Casing	ULv0 Construction
Casing colour	Black
Cables	LSZH 3 core flex type
Compliance CE	Health and Safety (Article 3.1a) Radio Equipment Directive 2014/53/EU Restriction of Hazardous Substances (RoHS) 2011/65/EC

* Some LED lamps may flicker at low levels of dimming

CP electronics ENERGY CONTROLS

+44 (0)333 900 0671
info@cpelectronics.co.uk
www.cpelectronics.co.uk

connect with us