DATASHEET

FUSION® Luminaires

EMERGENCY BULKHEAD
1W LED Non-Maintained Bulkhead

Product Ref: **FE3NMB**

Technical Features:

- Non-maintained operation
- Polycarbonate body and diffuser
- Hinged gear tray
- Gland entry points (5 x 20mm)
- Emergency duration: 3hr / 180mins
- Emergency lumen output: 95lm
- Includes legend pack



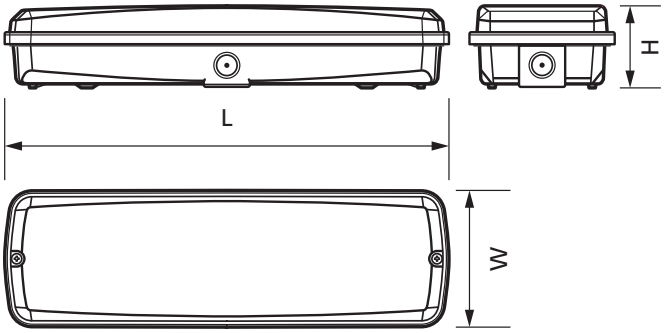

Product Specification

Battery Type	**Ni-Cd AA 3.6V 800mAh**
Beam Angle	**115°**
Cable Entry	**5 x 20mm gland entry points**
Colour Temperature	**6500K**
Class	**Class 1**
Colour	**White**
Compliance	**UKCA, CE**
Emergency	**3 Hours / 180 Mins - Non-Maintained**
Frequency	**50/60Hz**
Guarantee	**2 Years**
IP Rating	**IP65**
Lamp Life (L70/B50)	**30,000 Hours**
Lens Colour	**Clear**
Lumens Emergency	**95lm**
Manual Test Button	**No**
Material	**Polycarbonate body & diffuser**
Mounting	**Surface**
Operating Temperature	**0° to 40°C**
Self-Test	**No**
Suitable for	**Indoor or outdoor use**
Supplied with	**1 Left/Right Arrow, 1 Up/Down Arrow, 1 Left hand Running Man, 1 Right hand Running Man**
Voltage Rating	**220-240V**
Wattage	**1W**
Weight	**0.513kg**
Height	**63mm**
Length	**349mm**
Width	**107mm**

Errors and omissions excepted (E&OE). All information is subject to change without notice and is correct at the time of print. Refer to issue number and date below.

Tel: **+44 (0)1302 769 966**