Hamilton®

making connections beautifully

Wiring Accessories • Circuit Protection • Lighting Control & Multi-room Audio

81CC11PB-B

Sheer CFX Polished Brass 1 gang 10A (6AX) Card Switch On/Off with Blue LED Locator Polished Brass/Black

Item Image



Wiring

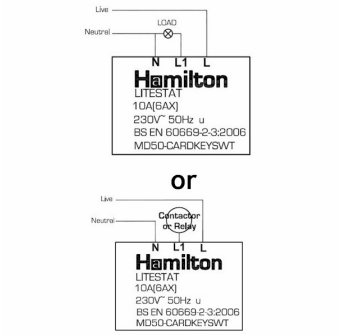

Dimensions

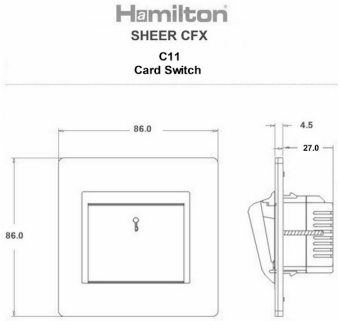

Primary Range	Sheer CFX
Insert Type	Card Switch
Plate Finish	Sheer CFX Polished Brass
Insert Colour	Polished Brass/Black
Dimensions (Nominal)	Single: Height = 86.0mm Width = 86.0mm Depth = 1.5mm plate + 3.0mm gasket
Fixing Hole Centres	Box Fixing = 60.3mm Grid Fixing = CFX Clips
Minimum Wall Box Depth	35mm
Switched Poles	Single
Current Rating	10A (6AX)
Voltage	220/250V AC
Maximum Load	10 Amp (6 Amp inductive)
Mains Frequency	50Hz
IP Rating	IP2XD
Contact Gap Minimum	3mm
Terminal Capacity 1	3 x 1mm2
Terminal Capacity 2	2 x 1.5mm2
Terminal Capacity 3	1 x 2.5mm2
Earth Terminal Capacity 1	5 x 1mm2
Earth Terminal Capacity 2	4 x 1.5mm2
Earth Terminal Capacity 3	3 x 2.5mm2
Earth Terminal Capacity 4	1 x 4mm2 Multi-strand
Earth Terminal Capacity 5	1 x 6mm2
Product Class 1	Must be earthed
Ambient Operating Temperature	-5° to +40°C
Recommended Location	Internal Use Only
Maximum Installation Altitude	2000m
Standard/Approval	BS EN 60669-2-3
Additional Notes	Adjustable Time Delay 10 seconds - 5 minutes. Suitable for 44mm and 54mm width Hotel Key Cards
Patents and Trademarks	CFX is a Registered Trade Mark No 2398667 Trade Mark No. 2296586 Sheer CFX is a Registered Design under Reference Nos. R21 = 3020754 SS2 =3020755

All products listed conform to current British or European standard and the product information is correct at the time of going to press.	All accessories are manufactured under an accredited BS EN ISO 9001 : 2015 Quality Management System.	It is the policy of the company to improve products as part of our development programme. Therefore, we reserve the right to alter designs and dimensions without prior notice.
Illustrations and diagrams are reproduced within the limitations of reproduction and printing process and are not binding.	Due to manufacturing processes we cannot guarantee an exact colour match and shadings of of certain finishes.	Correct as at 01 April 2017 08:28 AM E&OE

R Hamilton & Co Ltd, Unit 10 Carrick Business Centre, 4-5 Bonville Road, Brislington, Bristol, BS4 5NZ
T: +44 (0)1747 860088 F: +44 (0)1179 710414
E: info@hamilton-litestat.com www.hamilton-litestat.com
Registered Office 1 Rushmills, Bedford Road, Northampton NN4 7YB
Registered in London No. 941624 VAT Registration No. 222 6607 84