JC010028/BLK

Fireguard Next Generation Accessories

Fireguard Next Generation Anti-Glare Bezel IP65 Black

Features & Benefits



- Slim profile, die-cast aluminium bezels
- Designed specifically for use with Fireguard Next Generation Standard Can(JC010010/NB) and with LED lamps
- Reduces glare, ideal for application where soft ambient light is required
- IP20/IP65 options
- 2 year standard warranty (See Website for terms and conditions)

Fireguard
NEXT GENERATION

General Information

Trade Name	**Fireguard®**
Product Group	**LED - Replacement Bezel**
Color Finish	**Black**
Product Range	**Fireguard® Next Generation**
Overall Dimensions	**4.5 x 86**
Height (mm)	**4.5**
Diameter (mm)	**86**
Product Weight(kg)	**0.064**
IP Rating	**IP65**
Origin of manufacturer	**Made In China**
Warranty	**2 year standard warranty (See Website for terms and conditions)**
Lighting Product Type 1	**Accessory**

Construction

Rim Or Attachment	**Die-cast Aluminium**

Packaging

Quantity Per Outer Carton	**200**
Outer carton(L)- cm	**53**

Outer carton(W)- cm	**46**
Outer carton(H)- cm	**20**
Outer carton Net weight- kg	**13.60**
Outer carton Gross weight- kg	**14.60**
Product Bar Code EAN-13 Number	**5052544110481**
Outer carton Bar Code ITF-14 Number	**15052544110488**

Standards & Approvals

Manufactured In Accordance To	**BS EN 60598:2015, 2-1**
CE Marked	**Yes**
UKCA Marked	**Yes**
Date code/Purchase order No.	**Yes**
Certificate Of Conformity	**Available on request**
Accredited Members	**LIA, ISO9001-2015, ISO14001-2015**

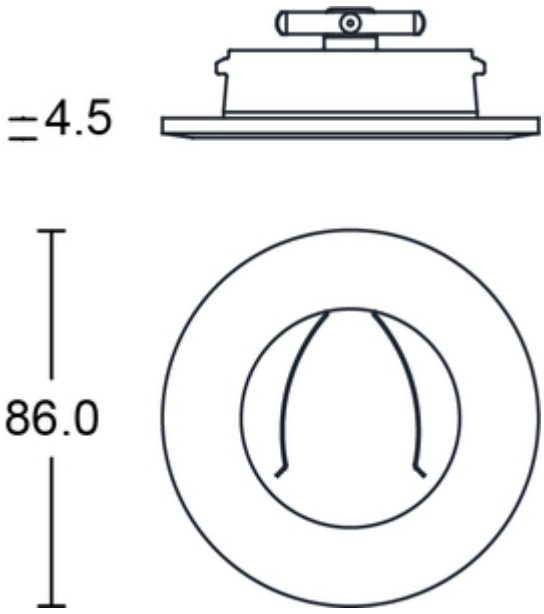

JCC Lighting LTD, Lux Park, Chichester Business Park, City Fields Way, Tangmere, Chichester, West Sussex, PO20 2FT.
Sales: 01243 838999 (8am to 5pm Monday to Friday) Fax: 01243 838998 | sales@jcc.co.uk | www.jcc.co.uk
Company Registration Number: 03044848 | VAT Number: 918544112