A KOHLER COMPANY

Mira Advance

THERMOSTATIC

ELECTRIC SHOWER

8.7 and 9.8 kW

BEAB CARE

Intertek

RNIB approved

These instructions must be left with the user

Installation Guide

Showering perfection

mira SHOWERS

Introduction

Thank you for choosing a Mira shower. To enjoy the full potential of your new shower, please take time to read this guide thoroughly, and keep it handy for future reference. Products manufactured by Kohler Mira Ltd are designed to be safe, provided that they are installed, used and maintained in good working order, in accordance with our instructions and recommendations.

Follow all warnings, cautions and instructions contained in this guide, and on, or inside the shower. This guide is also available in digital format from our website or by contacting customer services.

Electrical and electronic devices contain a range of materials that can be separated for recycling and used in new products. This product should not be disposed of with your general household waste. When this product has reached the end of its serviceable life please take it to a recognised WEEE (Waste Electrical and Electronic Equipment) collection facility such as your local civic amenity site for recycling. Your local authority or retailer will be able to advise you of your nearest recycling facility.

Products Covered

Product Variant		Adjustable Temperature Limit	Extended Lever Control	Drain Pump Compatible	Model No.
Standard	8.7 kW	✓	✗	✗	J09A
	9.8 kW	✓	✗	✗	J09D
Flex	8.7 kW	✓	✓	✗	J09G
	9.8 kW	✓	✓	✗	J09K
Flex Extra	8.7 kW	✓	✓	✓	J09N

The Bluetooth® word mark and logos are registered trademarks owned by the Bluetooth SIG, Inc. and any use of such marks by Kohler Mira Ltd is under license. Other trademarks and trade names are those of their respective owners.

Recommended Usage

Domestic	✓	Light Commercial	✓
Heavy Commercial	✗	Healthcare	✓

If you experience any difficulty with the installation or operation of your new Advance Thermostatic Electric Shower, then please refer to **'Fault Diagnosis'**, before contacting Mira Showers. Our contact details can be found on the back cover of this guide.

Guarantee

For **domestic installations**, Mira Showers guarantee the Mira Advance against any defect in materials or workmanship for a period of **two years** from the date of purchase (shower fittings for one year).

For **non-domestic installations**, Mira Showers guarantee the Mira Advance against any defect in materials or workmanship for a period of **one year** from the date of purchase. For Terms and Conditions refer to the back cover of this guide.

Important Safety Information

For continued safe operation, follow all instructions, warnings and cautions contained in this guide and on the shower unit. Failure to follow the instructions provided with the shower will invalidate the guarantee.

TO REDUCE THE RISK OF FIRE, ELECTRIC SHOCK OR INJURY:

1. Installation of the shower must be carried out in accordance with these instructions by qualified, competent personnel. Read all instructions before installing the shower.
2. Isolate the electrical and water supplies before commencing installation. The electricity must be isolated at the consumer unit. Mains connections are exposed when the shower cover is removed.
3. **DO NOT** install the shower in areas with high humidity and temperature (i.e. steam rooms and saunas).
4. **DO NOT** install the shower where it may be exposed to freezing conditions. Ensure that any pipework that could become frozen is properly insulated.
5. **DO NOT** switch the shower on if water leaks from the shower unit. Isolate the electrical supply to the shower immediately.
6. **DO NOT** switch the shower on if the case appears to be damaged or incorrectly fitted. Isolate the electrical supply to the shower immediately.
7. **DO NOT** switch the shower on if there is a possibility that the water in the shower unit or fittings is frozen.

8. **DO NOT** connect the outlet of the shower to any tap, control valve, trigger handset or other device intended to restrict the water outlet flow. Fit only the Kohler Mira showerhead as supplied with this product, only Kohler Mira recommended accessories must be used.
9. **DO NOT** perform any unspecified modifications, drill or cut holes in the shower or fittings other than instructed by this guide. When servicing only use genuine Kohler Mira replacement parts.
10. **ALWAYS** make sure that all electrical connections are tight and that there are no leaks after installation.
11. **DO NOT** run the shower with the filter removed.
12. If the shower is dismantled during installation or servicing then, upon completion, an inspection must be made to ensure all electrical connections are tight and that there are no leaks.

Pack Contents

Tick the appropriate boxes to familiarise yourself with the part names and to confirm that the parts are included.

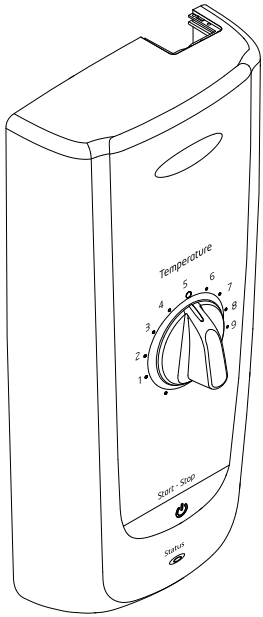

OR

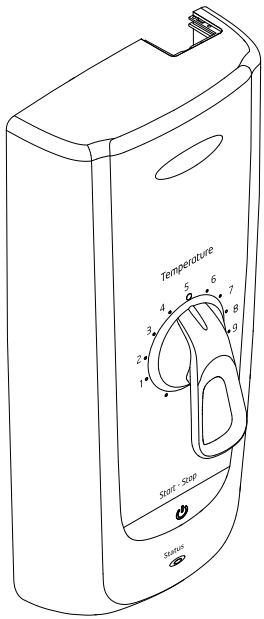

☐ 1 x Mira Advance Standard

☐ 1 x Mira Advance Flex or Flex Extra
(Instantmatch by Whale® Pump supplied separately)

☐ 1 x Compression Nut

☐ 2 x Wall Plugs

☐ 1 x Olive

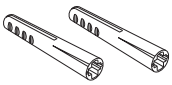

☐ 2 x Fixing Screws

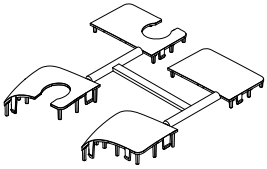

☐ 1 x Cover Insert

Documentation

☐ 1 x Installation Guide

☐ 1 x User Guide

☐ 1 x Installation Template

☐ 1 x Guarantee Card

☐ 1 x Quick Start Guide

Specifications

Plumbing Supply	Supply Source	Mains pressure cold water only	
	Minimum Dynamic Pressure*	50 kPa (0.5 bar) (100 kPa (1 bar) BEAB Care)	
	Maximum Dynamic Pressure	500 kPa (5.0 bar)	
	Maximum Static Pressure	1000 kPa (10 bar)	
	Minimum Static Pressure**	20 kPa (0.2 bar)	
	Maximum Inlet Temperature	30°C (20°C BEAB Care)	
	Minimum Inlet Temperature	2°C (5°C BEAB Care)	
	Inlet Connection	½" BSP male & 15 mm compression fitting.	
	Outlet Connection	½" BSP male fitting	
Electrical Supply	Nominal Rating at 230 V	8.0 kW	9.0 kW
	Nominal Rating at 240 V	8.7 kW	9.8 kW
	Supply Fuse/Circuit Breaker	8.7 kW	40 Amps
		9.8 kW	45 Amps
	Residual Current Device RCD	30 mA	
	Supply Cable	No larger than 16 mm² Note: Refer to current IEE regulations and BS 7671 to determine minimum cable size.	
	Isolation Switch	45 Amp Double pole, with 3 mm contact separation.	
Maximum Ambient Temperature		30°C	
Minimum Ambient Temperature		2°C	
Dimensions (shower unit)			
Height		408 mm	
Width		187 mm	
Depth		Flex : 112 mm , Standard : 105mm	

* Recommended dynamic pressure of 100 kPa (1.0 bar) for full flow performance.

** Static pressure must never fall below 20 kPa (0.2 bar) when other draw offs are in use, e.g. flushing toilet. This is the minimum pressure required to keep the flow valve closed.

Eco-design / Energy Labelling

Product Information

	8.7 kW	9.8 kW
Load Profile	XS	XS
Efficiency Class	A	A
Efficiency (%)	39.2	39.2
Daily Electricity Consumption (kWh)	2.159	2.157
Annual Electricity Consumption (kWh)	471	471
Sound Power Level (dB)	15	15

Indicative annual electricity consumption (kWh), based upon 2100 Wh daily water energy demand. Actual electricity consumption will depend on kW rating and the duration and frequency of use.

Decommissioning and Recycling

When these products reach the end of their serviceable life, if they are not being replaced they should be decommissioned by qualified, competent personnel, and the electrical and water installation made safe.

These products should not be disposed of with general household waste. They should be taken to a recognised WEEE (Waste Electrical and Electronic Equipment) collection facility such as your local civic amenity site for recycling.

Your local authority or retailer will be able to advise you of your nearest recycling facility.

Standards and Approvals

The Mira Advance complies with the requirements of the BEAB Care Mark Standard and the relevant directives for CE marking. The BEAB Care mark is invalid if the product is not installed and used in accordance with the manufacturer's specifications and instructions.

Hereby, Kohler Mira Ltd. declares that the radio equipment type Mira Advance Flex Extra (J09N) is in compliance with Directive 2014/53/EU. The full text of the EU declaration of conformity is available at the following internet address: www.mirashowers.co.uk.

The Mira Advance Flex Extra (J09N) operates in the 2.4 GHz frequency band at a maximum radio frequency power of +4 dBm.

Patents and Design Registration

Design Registration:	000738141: 0003, 0006, 0007, 0009
Patents:	GB: 2269466, 2270370, 2298478, 2298479, 2298481, 2289323, 2359339. Ireland: 80655, 83692.

Tools Required

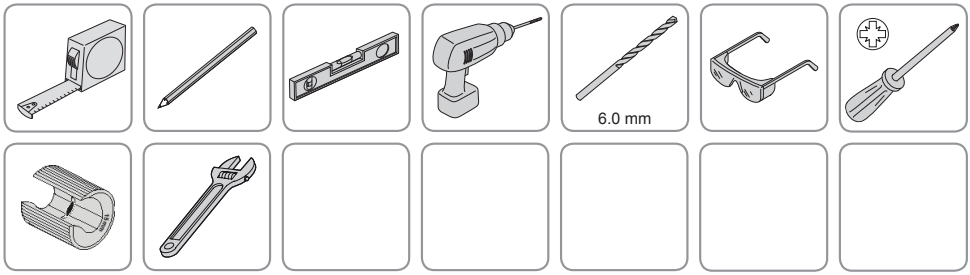

Installation Requirements

General

We recommend that the product be brought into the room where it is to be installed and left to acclimatise to room temperature, this will reduce the possibility of condensation on electronic components.

The shower works best when water supply conditions are stable and within the specifications, refer to section **'Specifications'**. If the supply conditions fall outside the specifications, the shower may go into a safe shut down condition.

DO NOT connect the outlet of the shower to any tap, on/off control valve, trigger operated showerhead or any other showerhead other than those specified for use with this shower. This could cause scalding or severe damage to the product and will invalidate the guarantee. Only Kohler Mira recommended showerheads, shower hoses and accessories must be used.

If pipework and/or electrical cables enter the shower from the rear through a hole in the wall, provision must be made to prevent water ingress back into the wall structure.

Route cable and pipe supplies via the cut outs moulded in the case and cover.

DO NOT perform any unspecified modifications to the shower or its accessories. Drilling fixing holes or making water or electrical entry points outside of the showers designed areas can lead to uncontrolled water ingress. This could cause fire, electrocution or damage to the product and will invalidate the product guarantee. When servicing only use genuine Kohler Mira replacement parts.

DO NOT increase the size or cut alternative pipe / cable entry points as water ingress into the product may occur.

Plumbing

Refer to section: **'Important Safety Information'** first.

1. Do not use sealing compounds on any pipe fitting or joints.
2. To avoid damage to the case when soldered fittings are used, pre-solder the pipework and fittings before connecting them to the inlet connector assembly.
3. Never fit the appliance to hot water supplies or to gravity systems of any description. Only fit the product to a mains cold water pipe.
4. If the pressure exceeds the maximum specified then a drop tight pressure reducing valve (PRV) must be fitted. This should be sited as close to the incoming mains stopcock and ideally set to 3.5 bar.
5. Avoid layouts where the shower hose will be sharply kinked. This may reduce the life of the hose.
6. Supply pipework **MUST** be flushed to clear debris before connecting the appliance. Debris will reduce the performance of the shower and may damage the product. Avoid running the pipework through excessively hot or cold areas such as hot loft spaces, airing cupboards, or in close proximity to hot water pipes. If this cannot be avoided, we recommend insulating the pipes.
7. The shower must be fitted onto a tiled or sealed finished surface i.e. on top of tiles. **DO NOT** tile up to the sides of the shower or use a sealant around the case. Failure to do this may cause appliance failure. To ensure the case and other components are not put under strain during installation always provide mechanical support when making plumbing connections. Upon completion of the installation ensure connections and back case are not under any stress due to misaligned pipework or electrical cables.
8. We recommend that a non-restrictive (free flowing) isolating valve is fitted in the cold water supply pipe to allow maintenance of the appliance.
9. When installed in very hard water areas (above 200ppm temporary hardness) your installer may advise the installation of a water treatment device, to reduce the effects of limescale formation. Any malfunction due to limescale is not covered by the manufacturer's guarantee. Your local water company will be able to advise the hardness of water in your area.

10. Wall fixings are supplied for solid wall structures. For other wall structures such as wall panels alternative fixings may be required. A minimum of 2 fixing screws must be used.
11. The position of the shower and shower fittings must provide a minimum gap of 25 mm between the showerhead and the spill over level of any bath, shower tray or basin and a minimum gap of 30 mm between the showerhead and the spill over level of any toilet, bidet or other appliance with a Fluid Category 5 backflow risk.

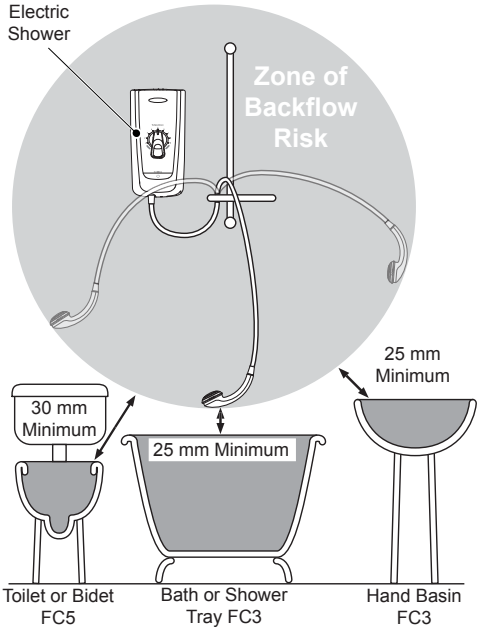

Hose Retaining Ring fitted and shower fittings fixed at a suitable height preventing dirty water backflow.

Note! There will be occasions when the hose retaining ring will not provide a suitable solution for Fluid Category 3 installations, in these instances an outlet double checkvalve must be fitted, this will increase the required supply pressure typically by 10kPa (0.1 bar). Double check valves fitted in the inlet supply to the appliance cause a pressure build up, which affect the maximum static inlet pressure for the appliance and must not be fitted. For Fluid category 5 double check valves are not suitable.

Electrical

Refer to section: **'Important Safety Information'** first.

1. In a domestic installation, the rating of the electricity supplier's fuse and the consumer unit must be adequate for the additional demand. All Mira Advance electric showers are high power appliances. Voltage drop due to local heavy demand will reduce the shower's performance.

2. The appliance must be earthed by connecting the supply-cable earth conductor to the earth terminal. Any supplementary bonding and supply cable size must conform to BS 7671.
3. As a guide only, and in accordance with BS 7671 we recommend close circuit protection:

   i.e. **8.7 kW = 40 Amp**

   9.8 kW = 45 Amp
4. For new installations a 30 mA Residual Current Device (RCD) must be incorporated into the electrical supply to the shower in accordance with the current wiring regulations. When replacing an existing electric shower we recommend that a 30 mA RCD is incorporated in accordance with current wiring regulations if not already provided.
5. A separate, permanently connected supply must taken from the consumer unit to the appliance through a double-pole switch, which has at least 3 mm contact separation. The switch can be a ceiling mounted pullcord type within the shower room or a wall mounted switch in the applicable zone area.
6. **DO NOT** exert strain on the terminal block. Make sure that the electrical connections are tightly screwed down.
7. **DO NOT** turn on the electrical supply until the plumbing has been completed.
8. Unless otherwise stated, electrical equipment such as extractor fans, pumps must not be connected via this product.

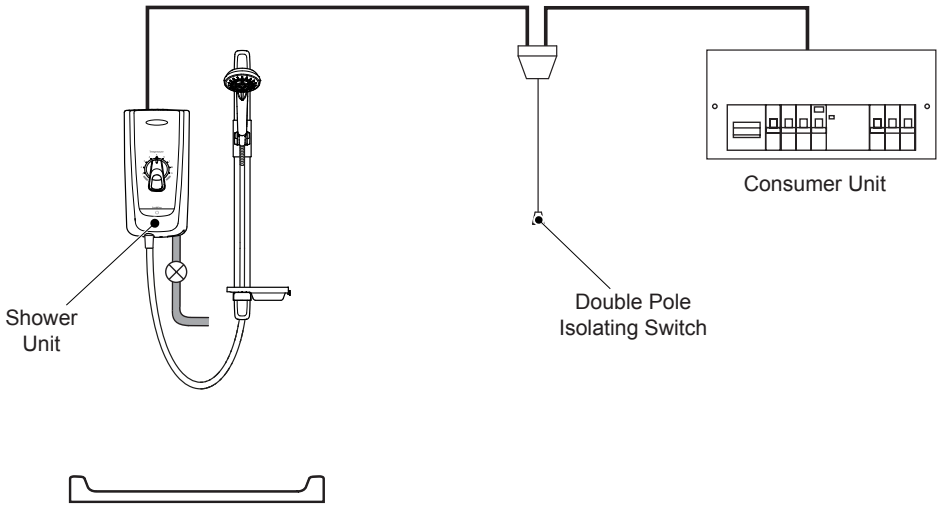

Electrical Schematic Diagram

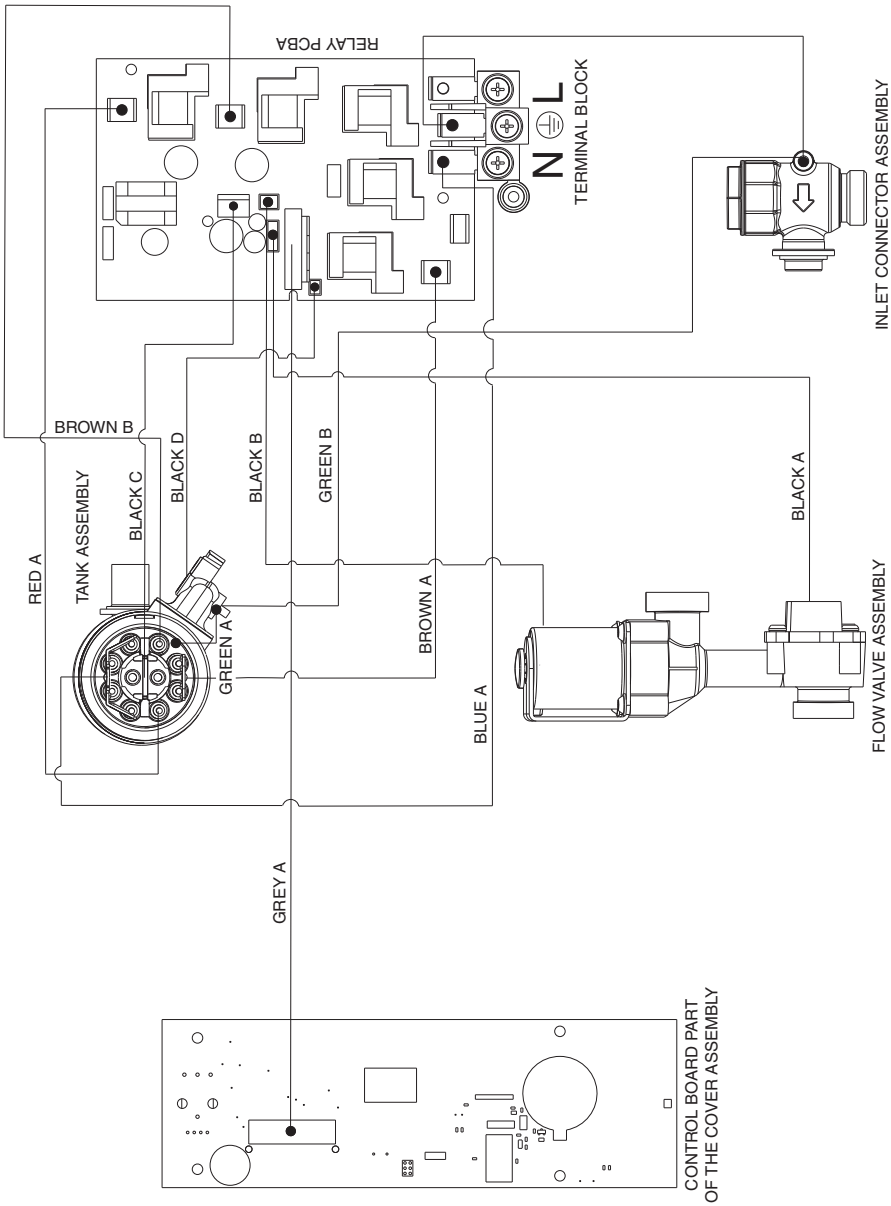

Shower Unit Wiring Diagram - Standard and Flex Product Only

Installation

Warning, isolate the electrical and water supplies before installing the shower!

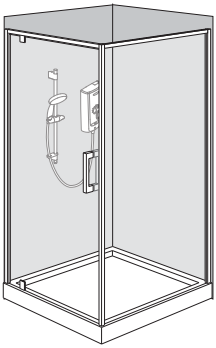

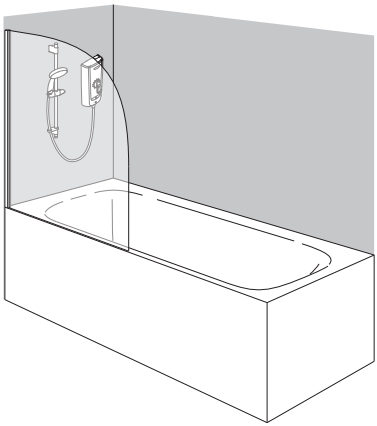

Decide on a suitable position for the shower unit and fittings leaving adequate space for maintenance. A suitable position for the shower will have a minimum clear distance of 100 mm around the shower unit to allow for cover removal and refitting. See ***"Installation - Plumbing"*** for further details.

Note! If installation includes an Instantmatch by Whale® drain pump, see **"Bluetooth"** section for information on position of wireless devices.

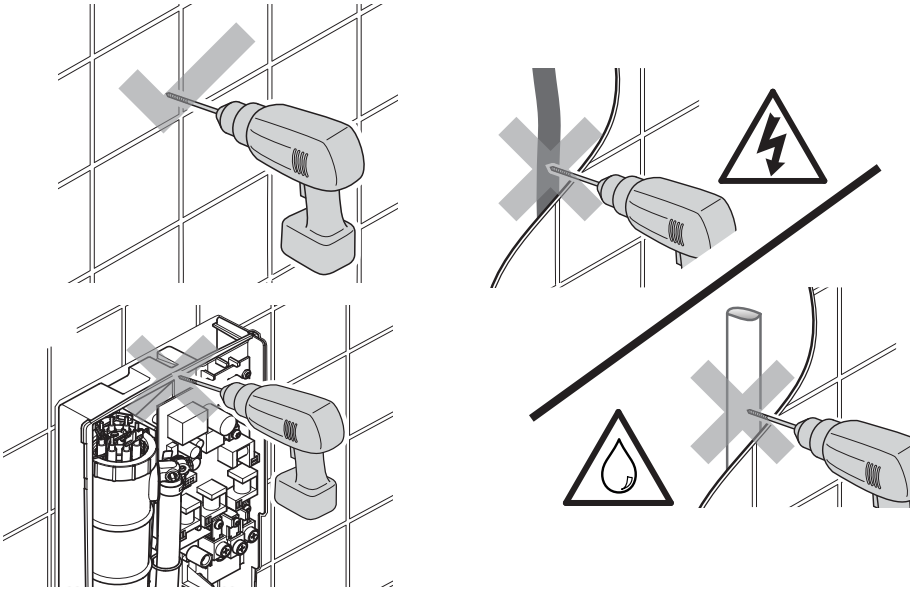

DO NOT drill through the shower unit into the wall.

DO NOT drill into buried cables or pipes.

1

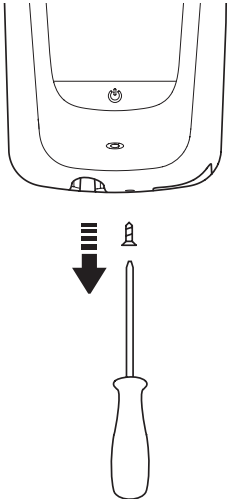

Remove the cover screw.

2

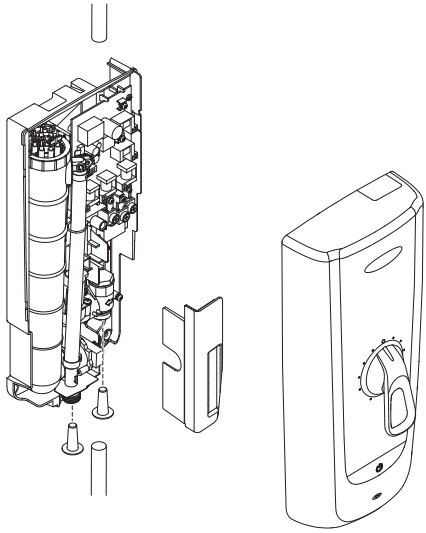

Remove the cover, the service tunnel and the bungs. Determine the cable and pipe supply either top or bottom or rear connection.

3

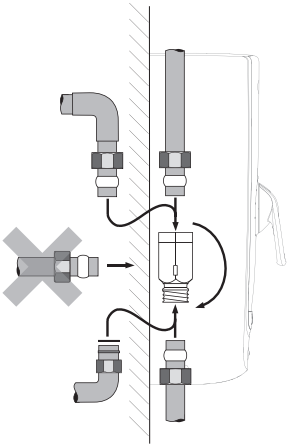

Turn the inlet connector to suit supply pipe. **Do not** trap the green wire.

4

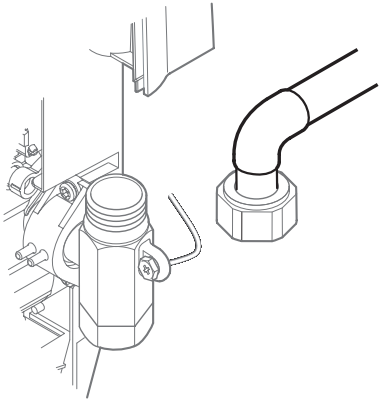

Complete any soldering required away from the appliance.

5

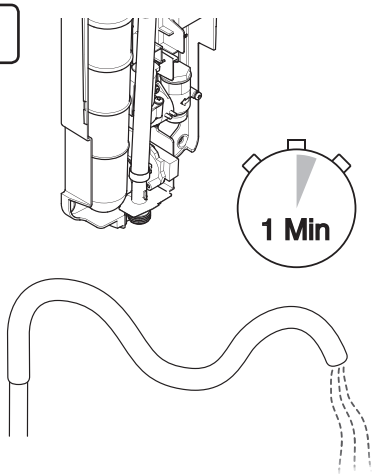

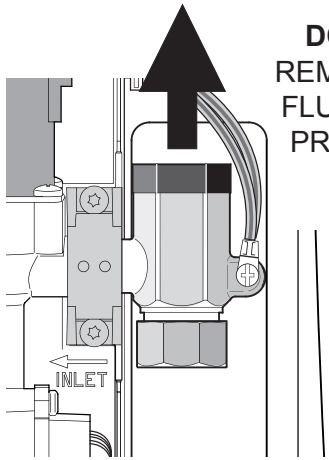

DO NOT REMOVE TO FLUSH THE PRODUCT

DO NOT flush through the product by removing the inlet filter. Debris may damage the product and invalidate the guarantee.

Flush the pipework for approximately 1 minute prior to connection.

6

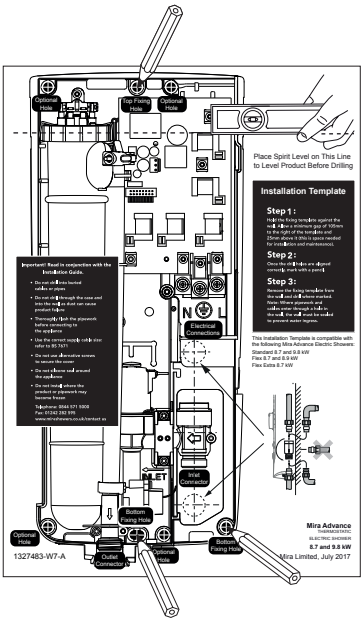

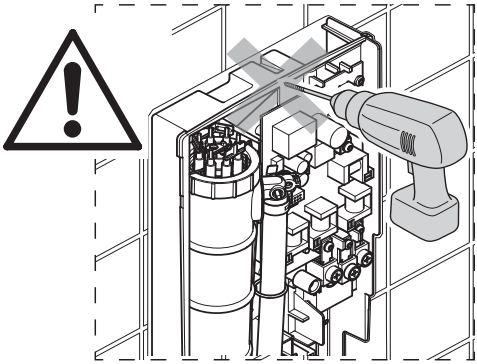

Use the installation template provided to mark and drill the required fixing holes. **Do not** drill through the shower unit into the wall. Plaster and brick dust will damage the internal components of the product.

Note! Make sure that you mark a minimum of two fixing holes, one at the top and one at the bottom.

7

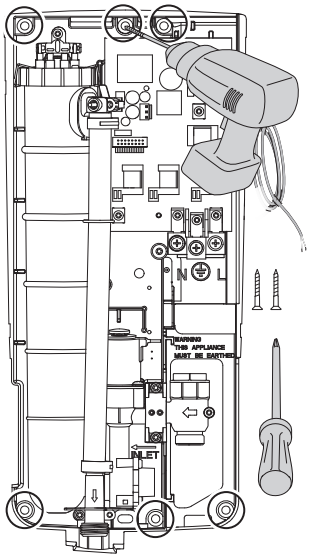

Drill the fixing holes through the plastic case in the designated areas as required.
Route the signal cable to the shower drain pump (if applicable).
Fix the appliance to the wall.
Use appropriate screws and wall plugs for fixing.
Note! Make sure that the product is securely fixed to the wall.

8

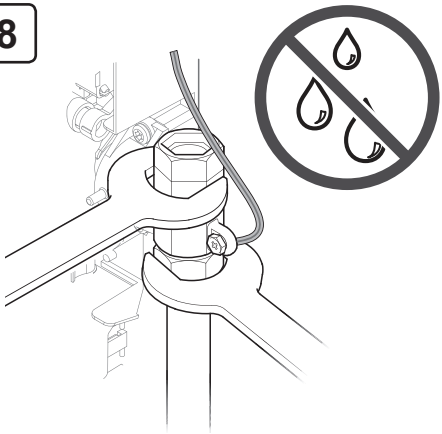

Connect supply pipe, then turn the water supply on and check the shower unit for leaks. **DO NOT** overtighten.

9

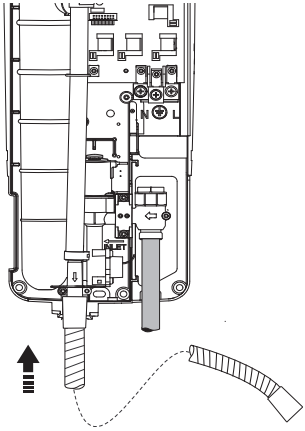

Connect the hose pointing into the bath or tray.

Note! Make sure that the hose washer is fitted.

DO NOT fit the shower head at this stage.

10 Important! Priming the Shower

Make sure that the electrical supply is isolated!

To prime the appliance, push down and hold the air bleed button until water flows from the hose for a minimum of 10 seconds. Repeat this procedure 3 times.

Failure to prime the appliance will seriously affect the shower performance!

Note! Water will leak from bleed button.

Carefully dry off water before connecting / reinstating the electrical supply.

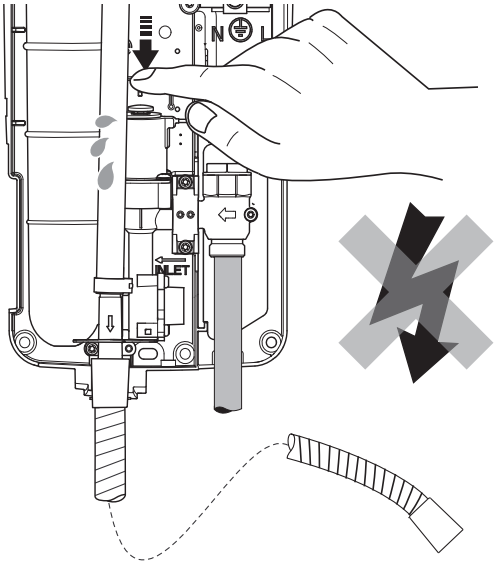

11

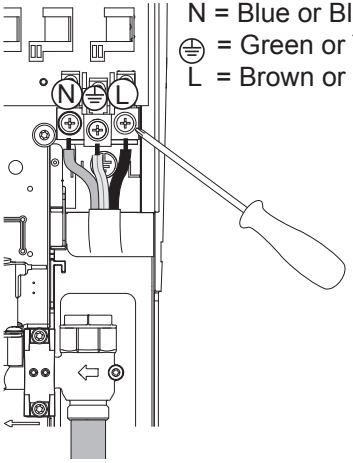

N = Blue or Black
⏚ = Green or Yellow/Green
L = Brown or Red

Feed the electrical cable into the case. Firmly connect the conductors. **DO NOT** exert strain on the terminal block.

12

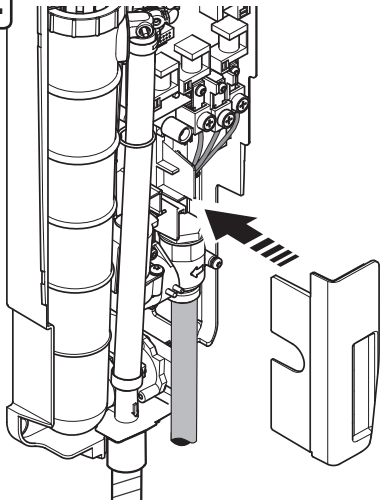

Refit the service tunnel.

Important! Refer to set up before fitting the front cover.

13 Setup

Maximum Temperature/BEAB/Eco (6 L/Min)

You must set the product up to ensure it operates correctly for the users requirements.

BEAB and Eco mode cannot be used together, if both modes are selected the shower will operate in BEAB mode and the Eco switch will not have any affect.

Factory setting with all switches in the off position at maximum temperature of 48° C. Please refer below for examples of settings.

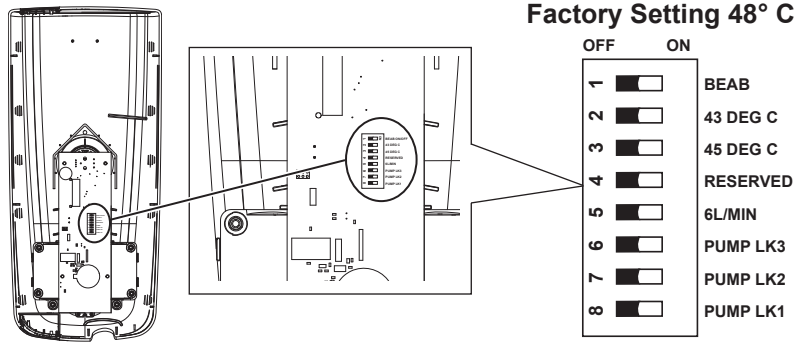

Rear of Cover

Beab 41° C

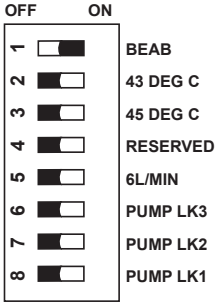

43° C

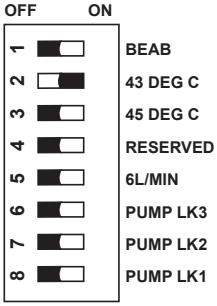

45° C

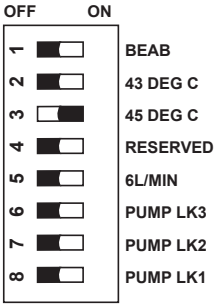

Eco

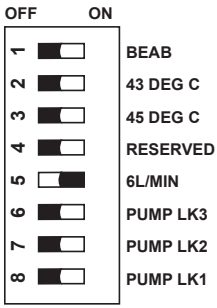

Bluetooth Setup

Mira Advance Flex Extra (J09N) for use with the Instantmatch by Whale® Digital Pump

Flex Extra J09N

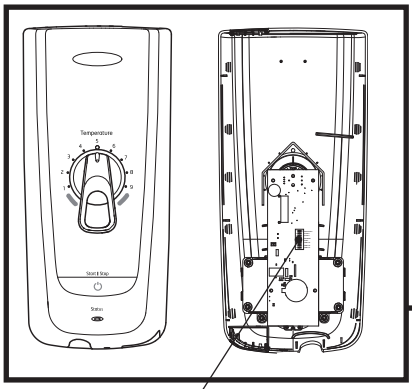

Instant Match Bluetooth Transformer
SDS236T (755.678)

The bluetooth operation of the Advance Flex Extra (J09N) will only work with a Whale bluetooth transformer. Previous Whale RF wireless transformers will not connect to the bluetooth Advance.

Note! Suitable Bluetooth transformer can be identified by blue start/stop button.

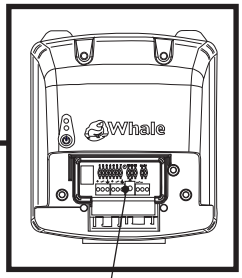

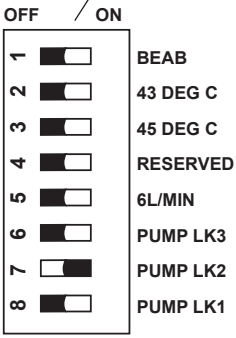

48º C Factory setting &

Bluetooth transformer connection
LK2 Set to ON

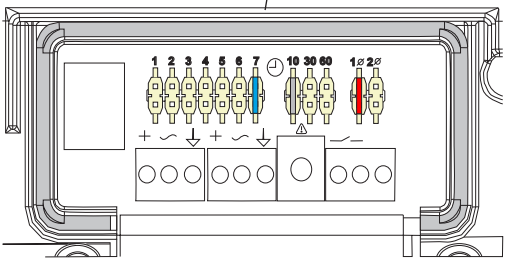

Jumper Settings for Bluetooth Pairing

Please refer to 'Bluetooth Pairing' to link the shower to the 'Whale' bluetooth transformer (SDS236T - 755.678)

Important Information Regarding Bluetooth Range!
Correct operation of the shower and pump relies on the strength of the bluetooth signal between them. You must install the Whale Pump and Bluetooth transformer as advised in the Whale Instantmatch installation guide. Failure to do so may cause the shower & pump not to pair or go into an error mode resulting in intermittent or complete failure to operate.

For retrofit installations where a Whale Bluetooth transformer is fitted in place of a RF wireless transformer then testing for correct operation must be carried out before final install.
Note! Metal objects such as steel baths, sinks, foil lined plaster board or solid walls can reduce the operational range. Where a Bluetooth signal cannot be established the pump and shower should be hardwired.

Hardwired Connection

Mira Advance Flex Extra (J09N) for use with the Instantmatch by Whale® Digital Pump

Flex Extra J09N

Whale Instant Match Transformer
SDS236T (755.678), SDS233T (755.617)
SDS135T (755.649)

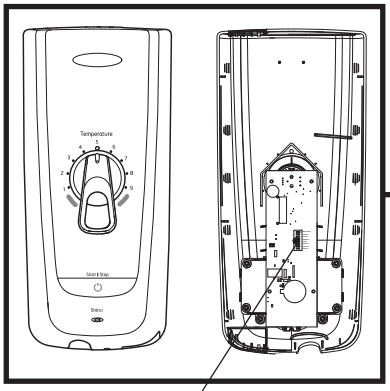

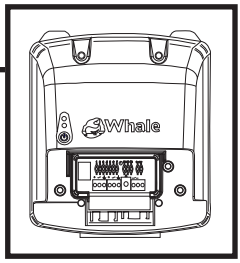

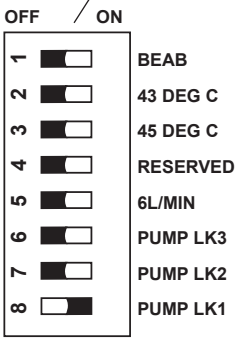

LK1 Set ON or OFF depending which wired transformer used, see transformer table

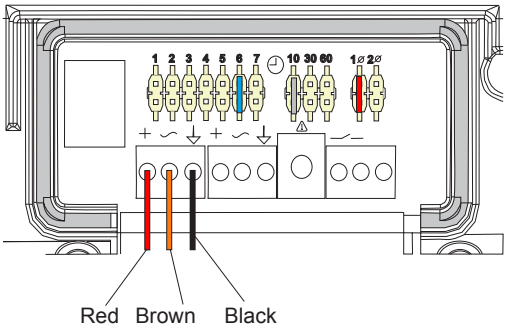

Jumper Settings and Cable Connection

If you are exchanging this Advance for a previous model (J97) that is using a pump driver board.

1. Remove and discard the driver board and its ribbon cable connections.

2. Cut the connector block off the end of the 2 wires coming into the shower from the waste pump.

3. Connect the two wires to the small terminal block on the relay PCB (as shown).

For new hard wired installations many waste pump manufacturers supply the cable to connect from the shower to the waste pump. If the cable is not supplied then Mira can supply a 4m length cable (part number 1759.125) This should be installed and connected as detailed.

Caution! Take care not to damage the relay board when making connections

3 wires signal cable connection to relay board

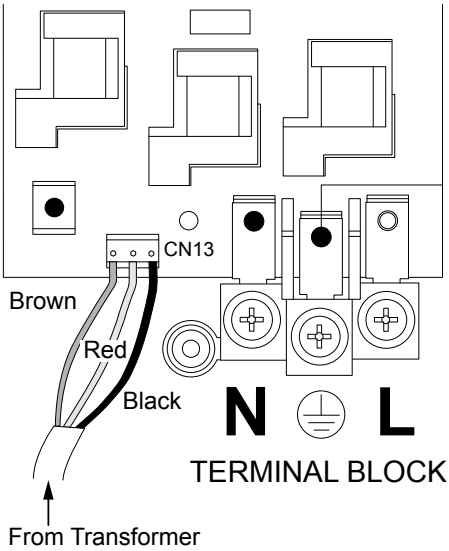

2 wires signal cable connection to relay board

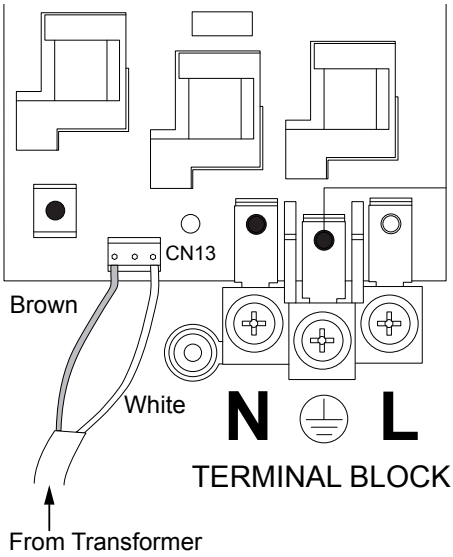

Advance Relay Board Showing Hardwired Connection to the Transformer

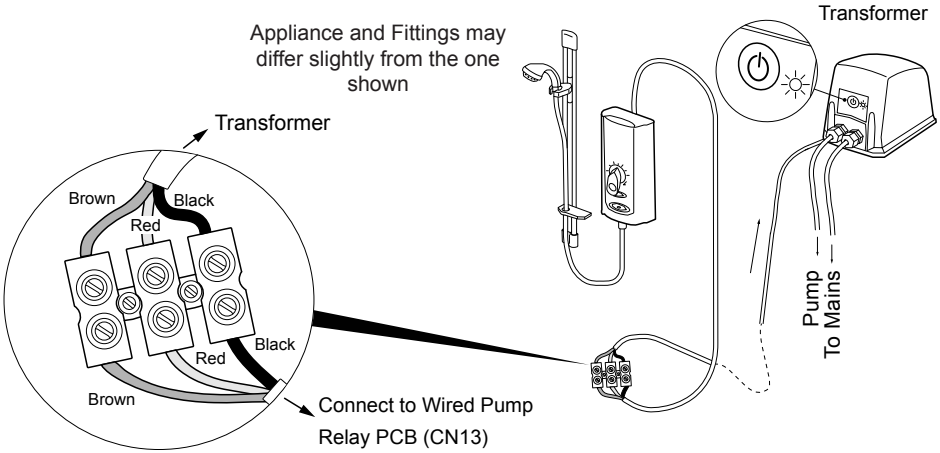

Hardwired Connection to the Transformer

Hardwired Connection - Other Whale Transformer

The Mira Advance 'Extra' models can be connected to the Instantmatch by Whale® Pump. This section describes how to identify and connect the shower to the drain pump. For full installation instructions of the Instantmatch by Whale® Pump, see separate guide.

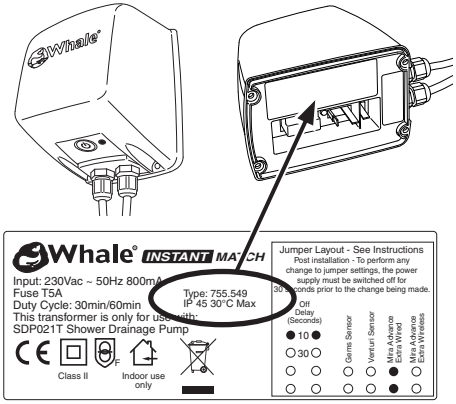

TYPE

Drain Pump	Shower	
Type	**Advance Control PCB**	**Signal**
755.199	LK1 - ON	Hardwired
755.210	LK1 - ON	Hardwired
755.299	LK1 - OFF	Hardwired
755.349	LK1 - OFF	Hardwired
755.399	LK1 - OFF	Hardwired
755.449	LK1 - OFF	Hardwired
755.549	LK1 - OFF	Hardwired/ Wireless
755.678	LK1 - ON	Hardwired/ Bluetooth

14

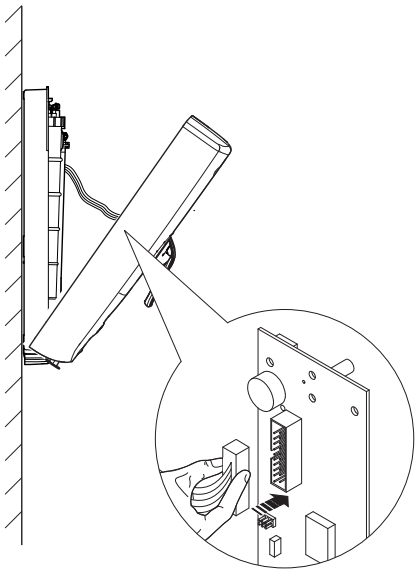

Connect ribbon cable to inside of cover.

15

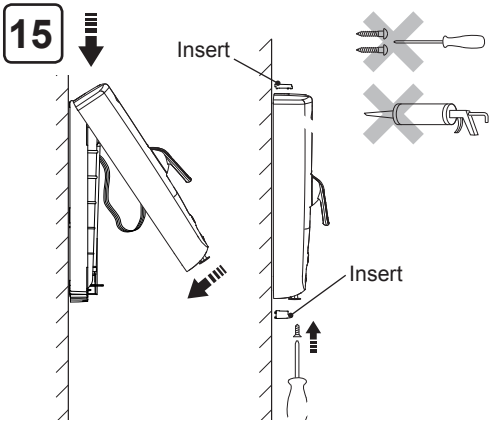

Refit cover. Inserts are provided to finish top and bottom as required.

Warning! Do not use alternative screws to secure cover. This can cause internal damage to appliance. Do not seal around any part of appliance.

Install the shower fittings. Refer to separate Installation and User Guide.

Note! Follow post installation requirements.

Bluetooth Pairing

1

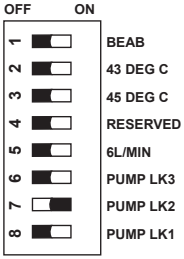

Make sure that the setting on the control PCB is set to LK2

2

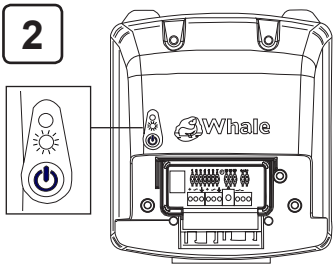

Turn on the power to the pump. The light will flash **red** indicating that it is not paired.

3

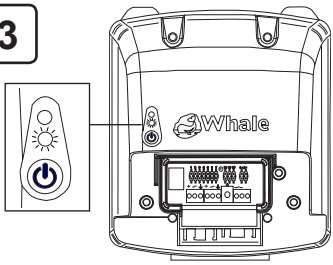

Press the start button and hold for 5 seconds, the light will flash **green** and **red** indicating that it has entered pairing mode.

Note! You have 60 seconds to pair the shower.

4

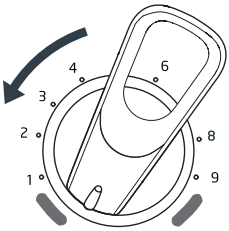

Turn the shower to full cold.

5

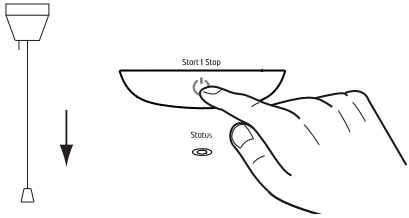

Turn on the power to appliance. Within 10 seconds press and hold the **Start/Stop**. The status light flashes **white** indicating the shower is in config mode.

6

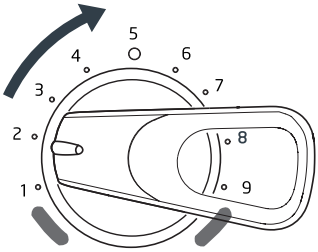

Slowly turn to position 2.

7

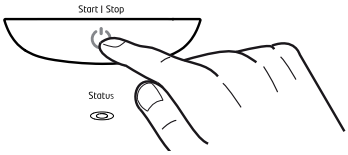

Press Start/Stop button.

The status light will flash **blue** indicating it is in pairing mode.

The light will then flash **white** indicating that the pump has been paired with the shower.

8 When shower & pump are paired turn the temperature control to full cold and press the Start/Stop button.

The shower will return to normal standby mode.

Bluetooth Unpairing

Some spare part renewal e.g. control PCB, may require the shower & pump to be unpaired and then paired again.

1	2	3
	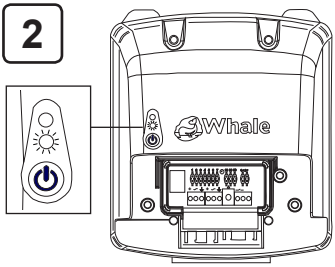	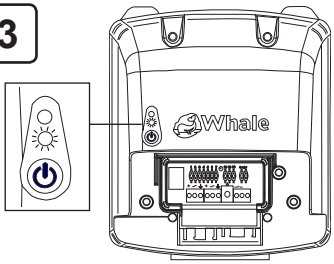
Turn off the electrical supply to the shower.	Leave the power to the pump still on. The light will flash **blue**.	Press the start button and hold until the light flashes **red** again. The pump is now unpaired. After unpairing and if required, follow procedure for bluetooth pairing to pair.

Post Installation Procedure

1

Turn on the electrical supply.

2

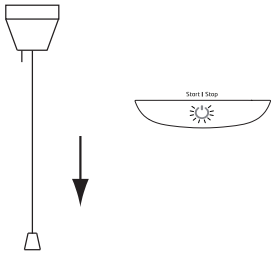

Turn on the power to appliance, check **Start/Stop** for white light.

3

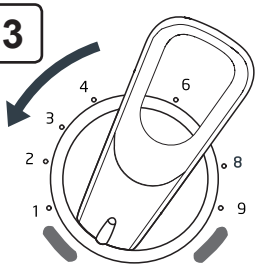

Turn the temperature to full cold.

4

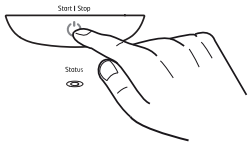

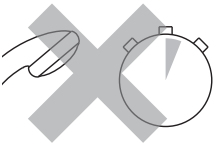

5 secs

Start the shower to test for water flow and run for at least 1 minute. If a shower drain pump is fitted, it should also start. If there is no water after 5 seconds, make sure that appliance has been primed.

5

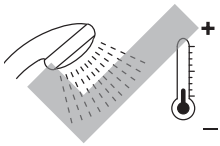

The shower will beep once when start/stop button is pressed (3 times for BEAB mode). The white start/stop button and blue status light will pulsate and shower will beep again after few seconds and lights will go solid. This will confirm flow and cold temperature.

6

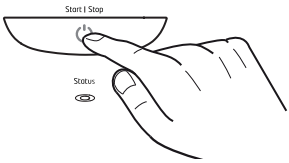

Push **Start/Stop** to turn off appliance. Pulsing start/stop light and "beep" indicates that appliance is shutting down.

7

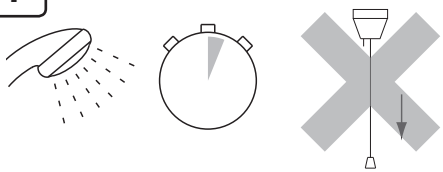

Appliance will purge water from heater tank for a few seconds.

Important! DO NOT isolate power until water has stopped.

Post Installation Procedure (Continued)

8

Turn on the electrical supply.

9

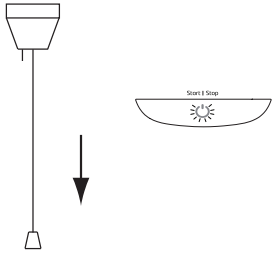

Turn on the power to appliance, check **Start/Stop** for white light.

Note! The shower will beep 3 times if set to BEAB mode

10

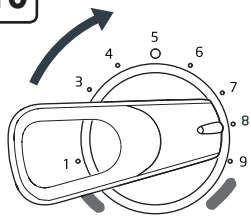

Turn the temperature control to number 8.

11

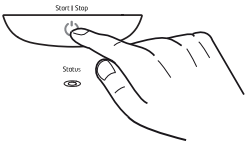

Start the shower to test for water flow. The shower will beep once (3 times when set in BEAB mode) and the white start stop and orange status light (green in BEAB Mode) will pulsate. Wait until the lights go solid and the shower will beep again

12

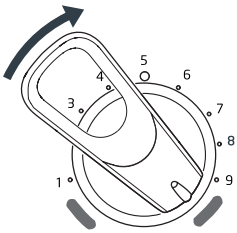

Turn the temperature control to the full hot position and continue to run the shower for at least 1 minute.

13

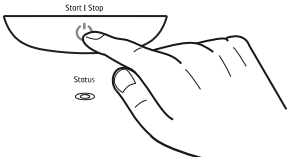

Push **Start/Stop** to turn off appliance. Pulsing start/stop light and "beep" indicates that appliance is shutting down.

14

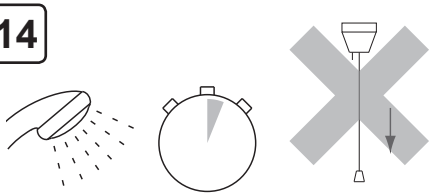

Appliance will purge water from heater tank for a few seconds.

Important! DO NOT isolate power until water has stopped.

This completes the installation of the Mira Advance shower. Please advise the user how to operate their new shower and leave them with the quick start guide and User instruction guide.

Fault Diagnosis

1. Installer Troubleshooting Guide

Refer to section: **'Important Safety Information'** first and refer also to **'User Trouble Shooting Guide'**.

The following troubleshooting solutions may require the removal of the cover of the shower. The cover should only be removed by a competent tradesperson and when doing so they should be aware of the following:

- Isolate the electrical and water supplies before initially removing the cover.
- Make sure Ribbon Cable is disconnected when removing the front cover and reconnect when maintenance is complete.
- Mains connections are exposed when the cover is removed.
- Refer to wiring diagram before making any electrical connections.
- Make sure all electrical connections are tight to prevent arcing/ overheating.
- Make sure all plumbing connections are watertight.

When following these instructions, it is sometimes necessary to examine the appliance with the electrical and water supplies turned **on**. It is therefore essential that the appropriate safe working practices are followed in accordance with the current Health and Safety Legislation.

If conducting a continuity check using a multimeter, make sure the electrical supply is **ISOLATED**.

Diagnostic Procedure

1. Ensure the shower pull cord / isolator switch is in the **OFF** position, then turn **ON** the pull cord / isolator switch.
2. Start the shower & observe light fault indication (if any) & refer to Error Codes to determine failure and rectify.

   Note! If the shower operates normally run the unit for at least 5 minutes at showering temperature and ensure the temperature remains stable.
3. Turn the shower off at the Start / Stop Button & observe 'phased shutdown'. **DO NOT** isolate the power at the pull cord / isolator switch until the water flow stops.
4. Show the user the correct start / stop procedure and general operation of the shower. Advise user that isolating the shower before the flow has stopped may damage the shower.

Error Codes

Status Light Indication Status	On/Off Light Indication	Error Code	Possible Cause/Rectification
Flashing Red	Flashing	A	1. Check isolator valves are fully open. 2. Clean / replace filter, refer to section: **'Maintenance'**. 3. Check Hose / showerhead is not blocked.
	Off	B	**Flex Extra models only -** Check the Bluetooth transformer is switched on, should there be a Flashing Blue Light this indicates loss of connection between the shower and transformer. Turn the shower off and back on, if problem persist, the transformer maybe too far away from the shower or obstacles between may be reducing the signal range.
Flashing Red/Yellow	Off	C	Replace the Heater Tank.
	Flashing	D	Press the blue button on top of the valve assembly to purge the hot water out of the heater tank.
Flashing Red/Blue	Off	E	Replace the valve assembly.
	Flashing	F	Check Installation - The inlet temperature may be too hot.
	On	G	Replace the front cover assembly.

Status Light Indication Status	On/Off Light Indication	Error Code	Possible Cause/Rectification
Flashing Red/White	Off	H	Replace the Control Board.
	Flashing	I	Isolate the electricity supply at the pull cord for a few second, then re-apply power.
	On	J	Replace the Relay Board.
Flashing Yellow/Blue	Off	K	**Enabled for Bluetooth Whale Pump but pump has not been paired (Only suitable for J09 Flex Extra Models) -** 1. If this is a Standard Advance or Flex, the installation does not have /require a pump, check that switch “PUMP LK2” on the Control Board is in the off position. 2. Put the shower into Bluetooth pairing mode and effect the pairing process with the pump.
Off	Off	L	1. Check the supply voltage. 2. Change the Thermal Trip. 3. Change the Relay PCB.
Flashing White	Flashing	M	1. Power reapplied following incorrect shutdown. If started, Water at outlet may be hotter than normal 2. If in BEAB mode, shower will not start if outlet temperature is too hot.

Additional Notes!

Shower Temperature - If the shower maximum temperature is too cold or too hot, check the configuration of switches. Refer to section - **SET UP**.

Shower Tray Will Not Empty - If the shower is in running mode (water is coming from the handset) but the drain pump is not running, check that the pump has power and is operational. Refer to section - **SET UP**.

BEAB Care In-Service Tests

The BEAB Care In-Service Tests apply to products operated and maintained within the BEAB Care approval requirements.

To maintain the validity of the BEAB Care mark, the installation and appliance should be inspected regularly. The purpose of the in-service tests is to monitor and record the performance of the shower. Any deterioration in performance can indicate the need for maintenance work on the appliance and/or the water supplies.

Frequency of Inspections

Upon the initial installation of the shower and after any major repair work, the in-service tests must be performed and the results recorded on the BEAB Care In-Service Test Record. The shower should be tested again within 6 to 8 weeks after installation or any major repair.

If there is no significant change in the outlet water temperature greater than ±1º C between the two inspections, the in-service test frequency may be reduced but must not exceed 12 months between any two inspections.

Equipment Required

The following equipment or suitable equivalent will be required in order for the tests to be performed:

Digital Multimeter

100 mm diameter plastic funnel

Digital liquid thermometer accurate to 0.1º C

2 - 22 l/min flow measure cup

Pass/ Fail Criteria

If the outlet water temperature measured in step 14 has changed by more than 1º C since the previous inspection. The shower, showerhead, hose and inlet filter should be checked for blockages and cleaned and descaled or if required renewed. Checks should also be performed to confirm that, the maximum temperature setting has not been changed, any check valves or other backflow prevention devices are working correctly and that any isolating valves in the supply pipework are fully open. The shower should be recommissioned and re-tested.

If either of the outlet water temperature measurements are more than 2º C above the maximum temperature setting this is considered to be a failure, **the shower must not be used**, until the fault has been rectified and the product successfully re-tested.

Test Procedure

This procedure should be conducted by qualified, competent personnel only.

WARNING, LIVE ELECTRICAL WIRES ARE EXPOSED WHEN THE COVER IS REMOVED!

1. Turn the temperature control fully anti-clockwise.
2. Start the shower and allow it to run for at least two minutes
3. Stop the shower and isolate the electrical and water supplies.
4. Remove the inlet filter and record the incoming water temperature. The temperature of the water must be within the range of 5 - 20º C.
5. Clean, or if necessary renew, and refit the inlet filter.
6. Switch on the electrical supply and record the voltage at the terminal block. The voltage must be in the range 230V ±10%. Isolate the electrical supply.
7. Turn on the water supply and check for leaks. Hold down the air bleed button to prime the shower (see Installation - Priming the Shower).
8. Remove the showerhead from the hose. Position the end of the hose to allow water to drain safely while the shower is running, if necessary secure the hose in this position. Ensure the ribbon cable is connected to the cover.
9. Turn the temperature control fully clockwise.
10. Switch on the electrical supply. Start the shower and allow it to run for at least 10 seconds, then record the supply voltage at the terminal block.
11. Stop the shower and isolate the electrical supply.
12. Refit the showerhead to the hose and reattach to its holder.
13. Switch on the electrical supply to the shower and start the shower.
14. Using a plastic funnel, catch all the water flowing from the showerhead and record the temperature of the water flowing from the funnel. Using a flow measure cup, record the rate of water flow from the funnel.
15. Slowly restrict the water supply to the shower by closing the isolating valve gradually until the shower shuts down.
16. Switch off the electrical supply and open the isolating valve by a small amount. Hold down the air bleed button to expel all hot water from the tank.
17. Switch on the electrical supply to the shower. Run the shower for at least two minutes, then record the water temperature and rate of flow as described in step 14. If the shower will not run continuously, return to step 16.
18. When all tests have been performed and recorded, stop the shower. Isolate the electrical supply and open the isolating valve fully. Ensure the cover is correctly fitted and secured with screws then set the temperature control to position 5.

Maintenance

Tradesperson Maintenance - Inlet Filter Cleaning/Replacing

Read the section **'Important Safety Information'** first.

1

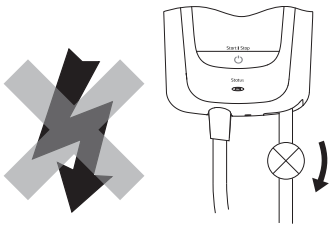

Electrical and water supplies to appliance are turned off.

2

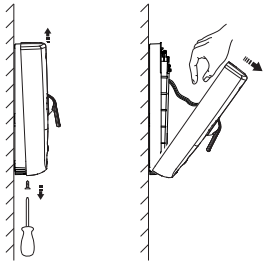

Remove cover screw, cover and splash guard. Disconnect ribbon cable from cover

3

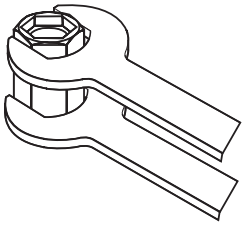

Hold a spanner or other suitable grips across flats of the metal connector. Unscrew filter using another spanner as shown. Clean or replace filter as necessary. Refit filter making sure it is screwed fully home. **Do not overtighten**.

4

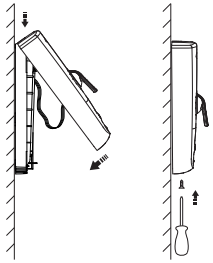

Make sure all plumbing connections are sealed before restoring water supply. **Re-prime appliance** (refer to **'Installation'**) before restoring electricity supply. Refit splash guard, ribbon cable and cover.

Spare Parts

Warning! If the wiring layout is changed or amended, the product functionality and safety may be affected. In the interests of safety, spares requiring exposure to mains voltage should only be fitted by competent persons.

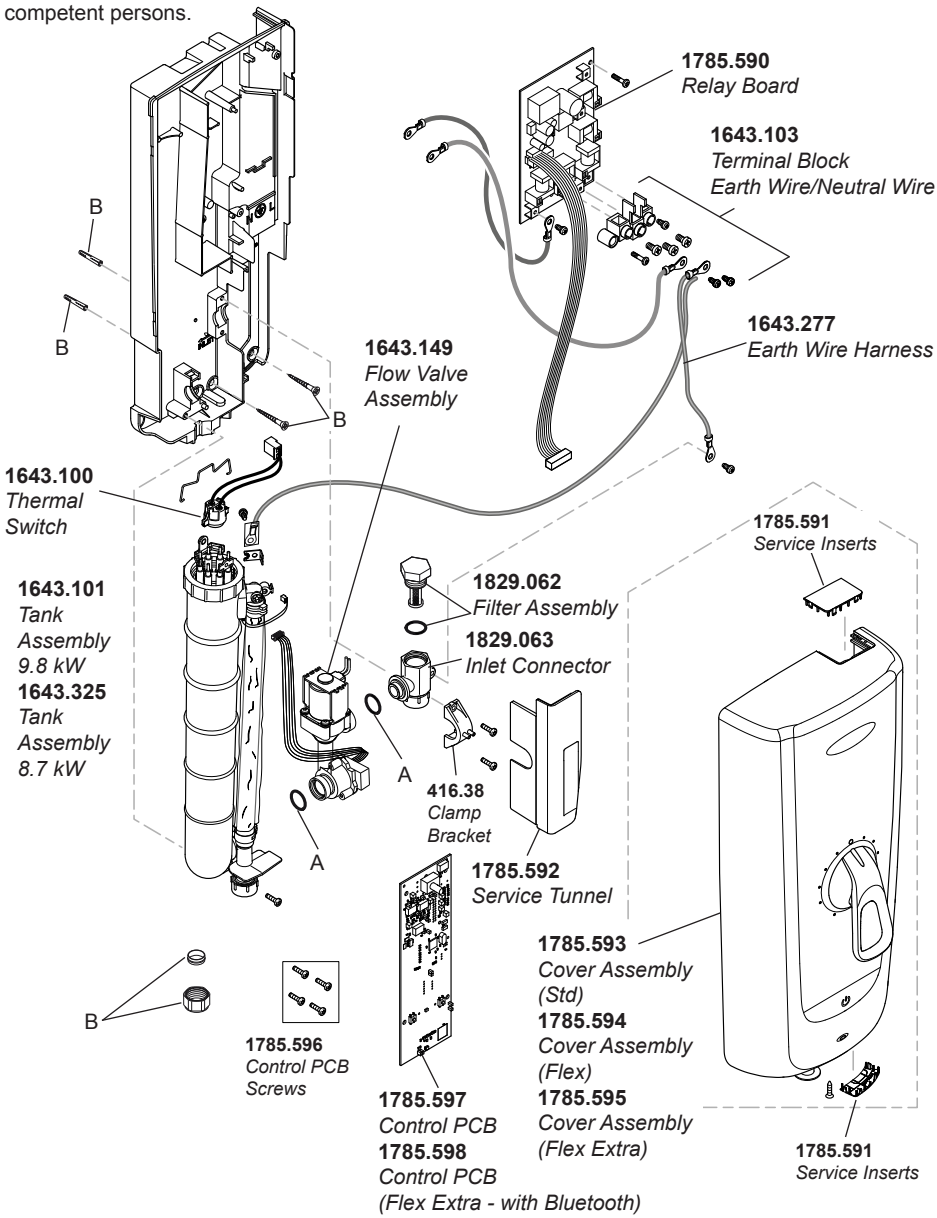

1643.113 *Component Pack (components identified 'B').*
1643.148 *Seal Pack (components identified 'A').*

Notes

BEAB Care In-Service Test Record

Installation Address: _____

Location of Shower: _____

Maximum Temperature Setting: _____
(maximum of 41 ºC for showering)

Installed by: _____

Date: _____

	Not Operating			Normal Operation			Restricted Supply		
Date / Signature	**Terminal Block Voltage (V)**	**Inlet Water Temp. (ºC)**	**Inlet Filter Cleaned**	**Terminal Block Voltage (V)**	**Outlet Water Temp. (ºC)**	**Flow Rate (l/min)**	**Outlet Water Temp. (ºC)**	**Flow Rate (l/min)**	**Equipment Details** (make, model, serial number, calibration date etc...)

Please record all test results on this form, including details of all measurement equipment used. This form is available to download at **www.mirashowers.co.uk**.

Customer Service

Guarantee

Your product has the benefit of our manufacturer's guarantee which starts from date of purchase. This guarantee only applies in the United Kingdom and Republic of Ireland. To activate this guarantee, please return your completed registration card, visit our website or free phone 0800 5978581 within 30 days of purchase (UK only).

Within the guarantee period we will resolve defects in materials or workmanship, free of charge, by repairing or replacing parts or product as we may choose.

This guarantee is in addition to your statutory rights and is subject to the following conditions :

- The guarantee applies solely to the original installation under normal use and to the original purchaser only. The product must be installed and maintained in accordance with the instructions given in this guide.
- Servicing must only be undertaken by us or our appointed representative.
  Note! If a service visit is required the product must be fully installed and connected to services.
- Repair under this guarantee does not extend the original expiry date. The guarantee on any replacement parts or product ends at the original expiry date.
- For shower fittings or consumable items we reserve the right to supply replacement parts only.

The guarantee does not cover:

- Call out charges for non product faults (such as damage or performance issues arising from incorrect installation, improper use, inappropriate cleaning, lack of maintenance, build up of limescale, frost damage, chemical attack, corrosion, system debris or blocked filters) or where no fault has been found with the product.
- Water or electrical supply, waste and isolation issues.
- Compensation for loss of use of the product or consequential or indirect loss of any kind.
- Damage or defects caused if the product is repaired or modified by persons not authorised by us or our appointed representative.
- Routine maintenance or replacement parts to repaired or modified by persons not authorised by comply with the requirements of theTMV2 or repaired or modified by persons not authorised by TMV3 healthcare schemes
- Accidental or wilful damage.
- Products purchased ex-showroom display.

What to do if something goes wrong

If your product does not work correctly refer to this manual for fault diagnosis and check that it is installed and commissioned in accordance with our instructions. If this does not resolve the issue, contact us for help and advice.

Helpdesk Service
Contact our Customer Services Team for product advice, to purchase spare parts or accessories or to set up service visit. You can contact us via phone or e-mail - contact details below.
Please provide your model name, power rating (if applicable) and date of purchase.

Mira Showers Website (www.mirashowers.co.uk)
Visit our website to register your guarantee, download user guides, diagnose faults, purchase our full range of accessories and popular spares, or request a service visit.

Spares and Accessories
We hold the largest stocks of genuine Mira spares and accessories.Contact us for a price or visit our website to purchase items from our accessory range and popular spares. (Only available in the United Kingdom)

Service/Repairs
No one knows our products better than our nationwide team of Service Technicians. We can carry out service or repair work to your product both during and after the guarantee period. (Only available in the United Kingdom and Republic of Ireland) Ask about our fixed price service repairs.

To Contact Us: UK

0844 571 5000
Calls cost 7p per minute plus your phone company's access charge

Fax: 01242 282595

Email – Visit
www.mirashowers.co.uk/contactus

By Post: **Mira Customer Services Dept, Cromwell Road, Cheltenham, Gloucestershire GL52 5EP**

To Contact Us: Eire Only

01 531 9337

E-mail:
CustomerServiceEire@mirashowers.com

Mira is a registered trade mark of Kohler Mira Limited.

The company reserves the right to alter product specifications without notice.

bsi. UKAS MANAGEMENT SYSTEMS 14648

mira SHOWERS

© Kohler Mira Limited, July 2017