Operation

Spray Settings

1. The handset has three spray settings (Coverage, Soft and Task). Turn the spray adjuster to activate the different spray settings.

Clamp Bracket Adjustment

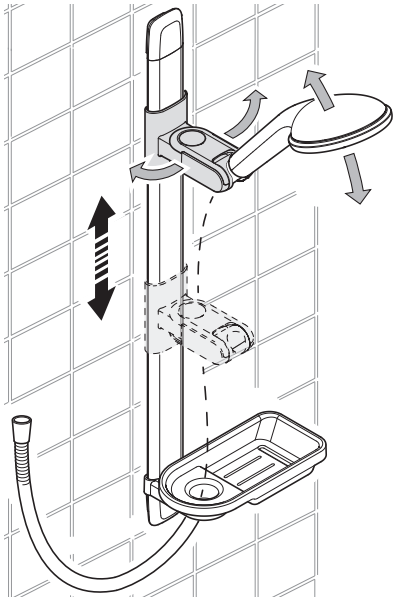

2. Slide the Clamp Bracket up and down the Slide Rail until the Showerhead is positioned to your preference.

Parking Socket

3. The Soap Dish (if fitted) and Hose Retaining Ring / Soap Dish Support can also be used as a parking socket for the Showerhead.

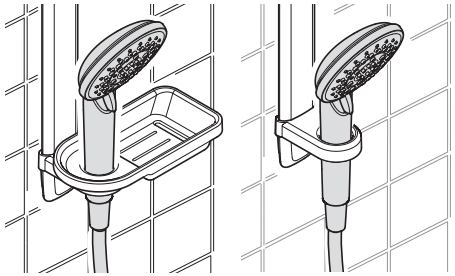

Cleaning and User Maintenance

De-scaling the Showerhead

Important! Keeping the showerhead clean and free from limescale will ensure that your shower and showerhead continue to perform to their maximum. A blocked showerhead can restrict the flow rate and may cause damage to your shower.

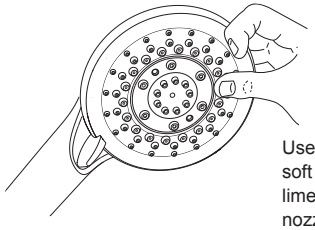

Use your thumb or a soft cloth to wipe any limescale from the nozzles

Inspecting the Hose

Important! The shower hose should be inspected periodically for damage or internal collapse, internal collapse can restrict the flow rate from the showerhead and may cause damage to the shower.

1. Unscrew the hose from the showerhead and the shower outlet.
2. Inspect the hose.
3. Replace if necessary.

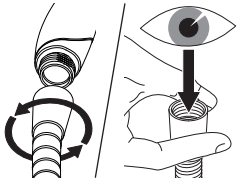

Sprayplate Removal

1. Insert the 2x prongs of the Spray Plate Removal Tool into the corresponding holes in the sprayplate. Turn the removal tool anti-clockwise and unscrew the sprayplate from the showerhead body
2. Clean all the components with a stiff brush. If necessary use a plastic kettle descalent in accordance with the manufacturer's instructions. Flush thoroughly with water before the shower is used.
3. Refit the components in reverse order. Take care not to cross thread the sprayplate.

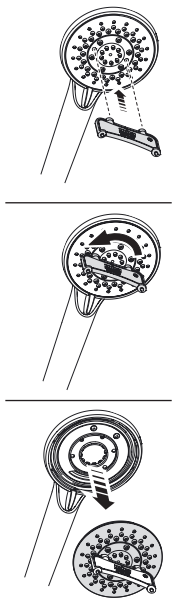

Spare Parts

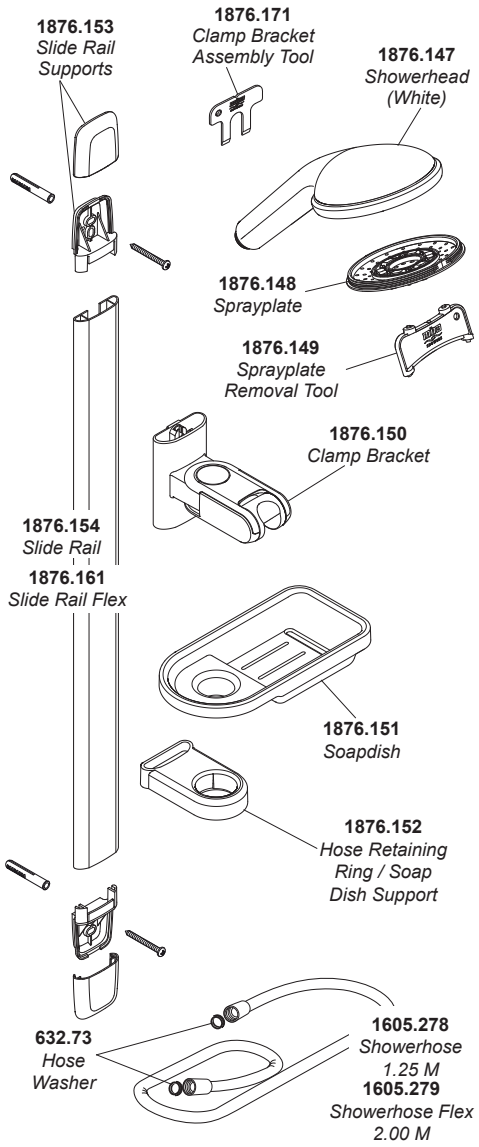

To Contact Us: UK

0844 571 5000

Calls cost 7p per minute plus your phone company's access charge

www.mirashowers.co.uk - Full details of the manufacturer's guarantee is available on the website.

© Kohler Mira Limited, 05/2017

Mira Advance Shower Fittings

Installation & User Guide

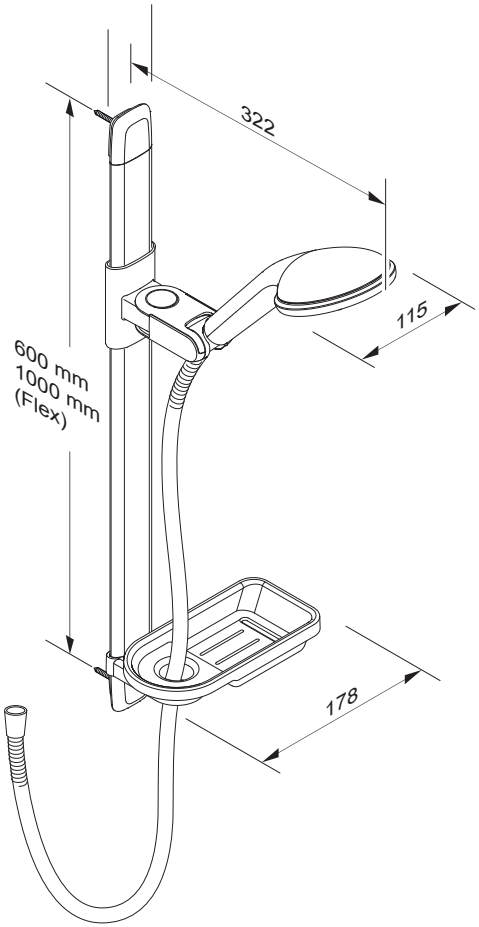

These instructions must be left with the user

Showering perfection

mira SHOWERS

1298649-W2-B

Specifications

Minimum maintained water pressure	0.1 bar (10 kPa)
Maximum maintained water pressure	2.0 bar (500 kPa)

General

1. Installation of the shower fittings must be carried out in accordance with these instructions by qualified, competent personnel.

2. The plumbing installation must comply with all national or local water regulations and all relevant building regulations, or any particular regulation or practice specified by the local water supply company.

3. Install the shower fittings over a water catchment area and position so that the water discharges down the centre line of the bath, or across the opening of a shower cubicle. The handset should direct the water away from the shower unit.

4. Do not fit any form of flow control in the outlet pipe work if the shower fittings are installed in conjunction with a product that requires the fittings to act as a vent (e.g. an electric shower).

5. Do not use excessive force when making connections.

6. Avoid layouts where the shower hose will be sharply kinked. This may reduce the life of the hose.

7. Special consideration should be given to the fixing arrangements when installing onto a dry lined, stud partition, shower cubicle or laminated panel wall structures. Installers may wish to obtain alternative proprietary cavity fixings, or choose other options, however, these methods of fixing are beyond the scope of this guide.

8 . The position of the shower fittings must provide a minimum air gap of 25 mm between the showerhead and the spill over level of any bath, shower tray or basin. There must be a minimum distance of 30 mm between the showerhead and the spill over lever of any toilet, bidet or other appliance with a Fluid Category 5 backflow risk.

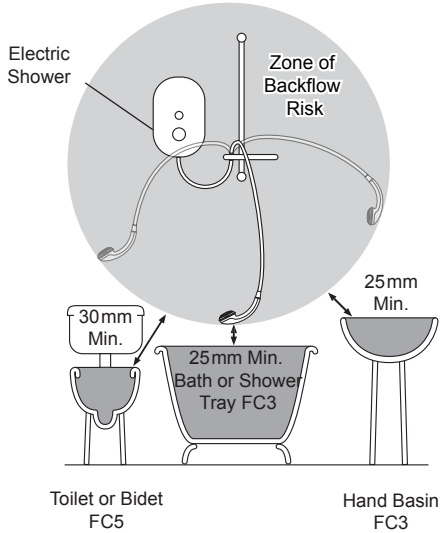

Hose Retaining Ring Fitted and Shower Fittings Fixed at a Suitable Height Preventing Dirty Water Backflow

Note! There will be occasions when the hose retaining ring will not provide a suitable solution for Fluid Category 3 installations. In these instances an outlet double checkvalve must be fitted, this will increase the required supply pressure typically by 10 kPa (0.1 bar).

Double checkvalves fitted in the inlet supply to the appliance cause a pressure build up, which affects the maximum static inlet pressure for the appliance and must not be fitted. For Fluid Category 5, double checkvalves are not suitable.

Installation

1. Carefully remove the protective film from the Slide Rail.

2. Fit the clamp bracket assembly tool into the clamp bracket as shown in the diagram. It should be pushed behind the spring loaded clamping mechanism to allow the bracket to easily push onto the slide bar.

   Note! The clamp bracket assembly tool will only work correctly on the top side of the clamp bracket

3. Push the Clamp Bracket down onto the Slide Rail. **Note!** The Clamp Bracket Assembly Tool will eject as the Clamp Bracket fits onto the rail.

4. Move the clamp bracket assembly up and down the rail several times after fitting to ensure a smooth operation.

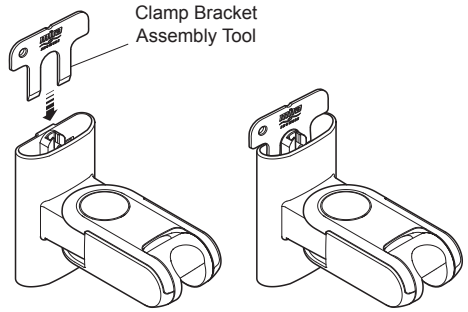

5. Slide the Hose Retaining Ring / Soap Dish Support onto the Rail.
6. Push the End Brackets into each end of the Slide Rail. Make sure that each support is pushed home firmly.
7. Hold the Slide Rail Assembly against the wall in the desired position.

   Note! Ensure the Clamp Bracket is fitted in the correct orientation.

8. Using the Slide Rail Brackets as a template, mark the positions of the top and bottom fixing holes. **DO NOT** drill through the Slide Rail Brackets into the wall.

   Note! To allow slight adjustments to the Slide Rail mark one of the vertical oval holes and one of the horizontal oval holes.

   Fit the Slide Rail to the wall and tighten the screws, ensure the rail is vertical.

9. Check that the slide rail is vertical then drill two 8 mm fixing holes.

10. Fit the wall plugs.

11. Fit the End Caps to the Slide Rail.

12. Align the Soap Dish and the Hose Retaining Ring / Soap Dish Support as indicated, then push down to join them together.

13. Twist the Soap Dish to the left or right to lock into position.

    Note! If space is limited, fitting the Soap Dish is optional but the Hose Retaining Ring should always be fitted.

14. Fit the Hose Washer into the hose then screw the hose onto the Showerhead. **DO NOT** overtighten. **Note!** Use the additional Hose Washer if required.

15. Pass the Hose through the Hose Retaining Ring and Soap Dish (if fitted), then attach the Hose to the outlet of the shower control. Make sure the Hose Washer is fitted.

16. Place the Showerhead into the Clamp Bracket.

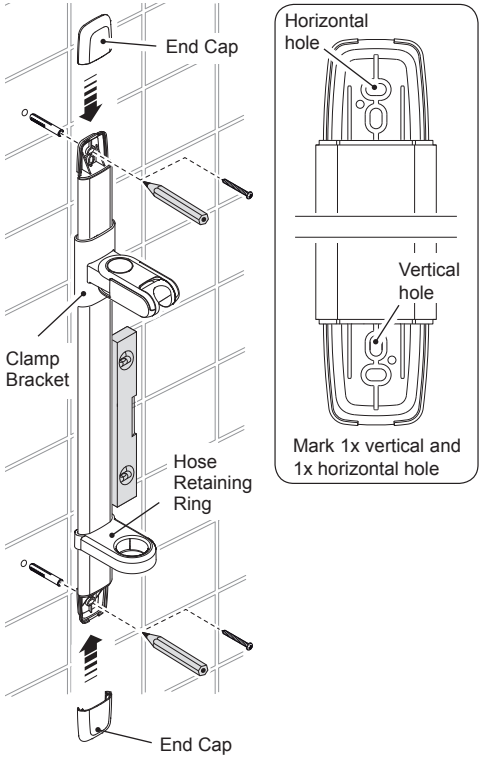
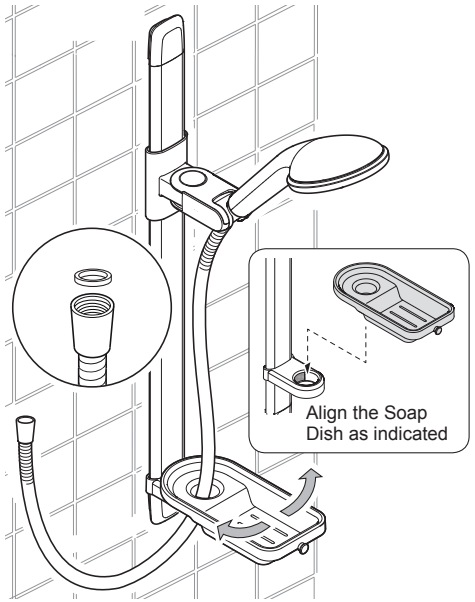
Handset Installation