COMMISSIONING

Maximum Temperature Setting

Follow this procedure to check and adjust the temperature before using the shower for the first time. **Make sure that all users are familiar with the operation of the shower. This guide is the property of the homeowner.**

The shower's safe hot temperature has been preset to 39°C, but may require adjustment for the following reasons:

- To reset to a comfortable temperature (may be required to suit your home's plumbing system).
- To suit your showering preference.

The following procedure requires a constant supply of hot water at a minimum temperature of 55°C.

1. Turn the shower ***ON*** to full flow.
2. Turn to full hot ***WITHOUT*** pressing the override button. Allow the temperature and flow to stabilise. This represents a safe hot temperature to shower with.
3. Press and hold the override button and turn the handle further until it stops. Allow the temperature and flow to stabilise. This is the maximum hot temperature.
4. Turn the temperature handle back to the override position.
5. To set the temperature either warmer or cooler, keep the handle at the override position and remove the concealing cap and the fixing screw.
6. Carefully remove the temperature handle without moving the stop assembly.
7. Refit the handle so that the lever is in approximately the 1 O'clock position.
8. Turn the handle to adjust either warmer or cooler. Wait for the temperature to stabilise between each adjustment and test the showering temperature is comfortable.
   Continue to adjust the temperature until you have a safe and comfortable shower for the override position.
9. Refit the handle to the 12 O'clock position. Refit the fixing screw and the concealing cap. Check the operation of the override button.

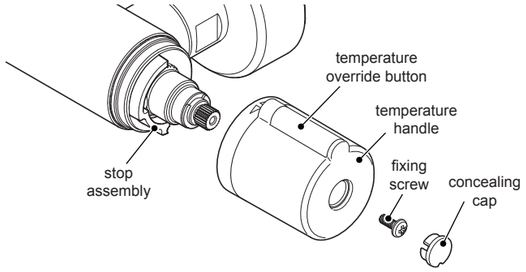

OPERATION

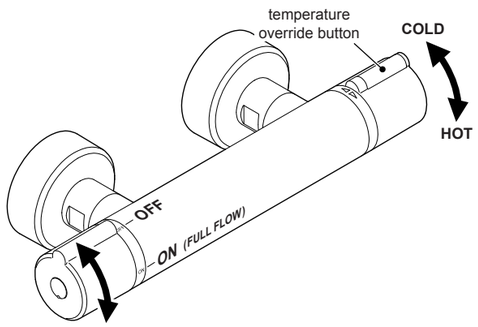

Adjusting the Flow

Use the flow handle to turn the shower on/off and adjust the amount of water flow.

Adjusting the Temperature

Use the temperature handle to make the shower warmer or cooler. For safety reasons, the temperature is limited by an override stop. To obtain a higher temperature, press and hold the override button and continue to turn.

USER MAINTENANCE

WARNING! PLEASE OBSERVE THE FOLLOWING TO REDUCE THE RISK OF INJURY OR PRODUCT DAMAGE:

1. **DO NOT** allow children to clean or perform any user maintenance to the shower unit without supervision.
2. If the shower is not to be used for a long period, the water supply to the shower unit should be isolated. If the shower unit or pipework is at risk of freezing during this period, a qualified, competent person should drain them of water.

Cleaning

Many household cleaners contain abrasives and chemical substances, and should not be used for cleaning plated or plastic fittings. These finishes should be cleaned with a mild washing up detergent or soap solution, and then wiped dry using a soft cloth.

Important! The showerhead must be descaled regularly, keeping the showerhead clean and free from limescale will ensure that your shower continues to give the best performance. Limescale build up can restrict the flow rate and may cause damage to your shower.

FAULT DIAGNOSIS

If you require a Mira trained service engineer or agent, refer to ***'Customer Service'***.

Symptom	Cause/Rectification
Water too hot or too cold	Inlets reversed (hot supply to cold inlet of shower unit), rework inlet pipework. Check the washer/filters are not blocked. Check the maximum temperature setting (If you have a combination type boiler it may not be producing sufficient hot water at the desired flow rate). Fit a flow regulator to the outlet of the shower unit. Installation conditions outside operating parameters, refer to ***'Specifications'*** and ***'Commissioning'***.
Poor temperature control	Make sure that the inlet temperature differentials are sufficient, refer to ***'Specifications'***.
Fluctuating or reduced flow	Check the showerhead and hose are not blocked. Check the washer/filters are not blocked. Make sure that the maintained inlet pressures are nominally balanced and sufficient, refer to ***'Specifications'***. Air lock or partial blockage in the pipework.
Water leaking from the showerhead	Water may drain from the showerhead for a short period after showering, this is normal. Check the water pressures are not too high for the product, refer to ***'Specifications'***.

SPARE PARTS

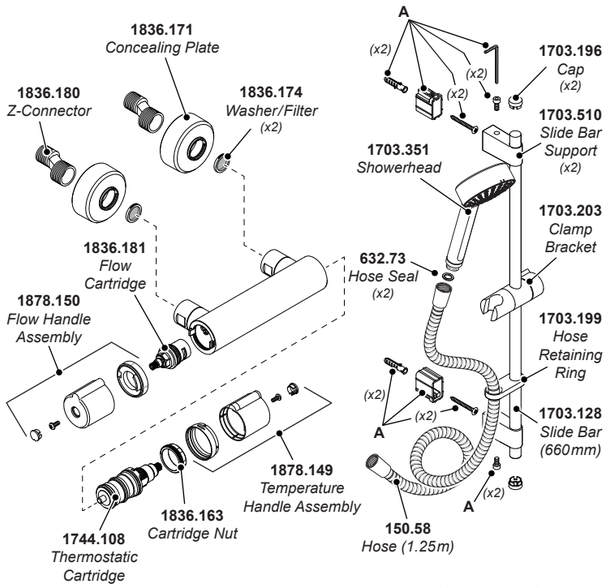

1703.194 *Mounting Pack - **'A'***

CUSTOMER SERVICE

Guarantee

Your product has the benefit of our manufacture's guarantee which starts from date of purchase. This guarantee only applies in the United Kingdom and Republic of Ireland. To activate this guarantee, please return your completed registration card, visit our website or free phone 0800 5978551 within 30 days of purchase (UK only).

Within the guarantee period we will resolve defects in materials or workmanship, free of charge, by repairing or replacing parts or product as we may choose.

This guarantee is in addition to your statutory rights and is subject to the following conditions:

- The guarantee applies solely to the original installation under normal use and to the original purchaser only. The product must be installed and maintained in accordance with the instructions given in this guide.
- Servicing must only be undertaken by us or our appointed representative. **Note!** If a service visit is required the product must be fully installed and connected to services.
- Repair under this guarantee does not extend the original expiry date. The guarantee on any replacement parts or product ends at the original expiry date.
- For shower fittings or consumable items we reserve the right to supply replacement parts only.

The guarantee does not cover:

- Call out charges for non product faults (such as damage or performance issues arising from incorrect installation, improper use, inappropriate cleaning, lack of maintenance, build up of limescale, frost damage, chemical attack, corrosion, system debris or blocked filters) or where no fault has been found with the product.
- Water or electrical supply, waste and isolation issues.
- Compensation for loss of use of the product or consequential or indirect loss of any kind.
- Damage or defects caused if the product is repaired or modified by persons not authorised by us or our appointed representative.
- Routine maintenance or replacement parts to comply with the requirements of the TMV2 or TMV3 healthcare schemes
- Accidental or wilful damage.
- Products purchased ex-showroom display.

What to do if something goes wrong

If your product does not work correctly refer to this manual for fault diagnosis and check that it is installed and commissioned in accordance with our instructions. If this does not resolve the issue, contact us for help and advice.

Helpdesk Service
Contact our Customer Services Team for product advice, to purchase spare parts or accessories or to set up service visit.

You can contact us via phone or e-mail - contact details below. Please provide your model name, power rating (if applicable) and date of purchase.

Mira Showers Website (www.mirashowers.co.uk)
Visit our website to register your guarantee, download user guides, diagnose faults, purchase our full range of accessories and popular spares, or request a service visit.

Spares and Accessories
We hold the largest stocks of genuine Mira spares and accessories. Contact us for a price or visit our website to purchase items from our accessory range and popular spares. (Only available in the United Kingdom)

Service/Repairs
No one knows our products better than our nationwide team of Service Technicians. We can carry out service or repair work to your product both during and after the guarantee period. (Only available in the United Kingdom and Republic of Ireland.) Ask about our fixed price service repairs.

To Contact Us: UK

0844 571 5000
Calls cost 7p per minute plus your phone company's access charge

01242 282595

E-mail: Visit
www.mirashowers.co.uk/contactus

Mira Customer Services Dept.
Cromwell Road, Cheltenham,
Gloucestershire, GL52 5EP

To Contact Us: Eire Only

01 531 9337

E-mail:
CustomerServiceEire@mirashowers.com

Mira is a registered trade mark of Kohler Mira Limited. The company reserves the right to alter product specifications without notice.

1310898-W2-A

© Kohler Mira Limited, 01/2017

Mira Relate EV Thermostatic Shower Installation and User Guide

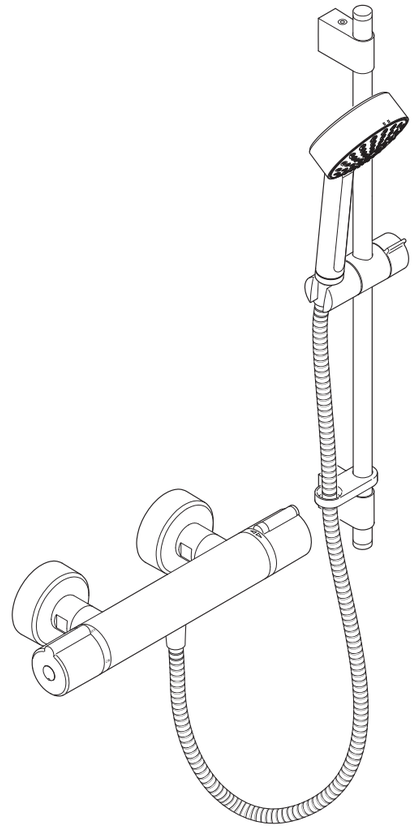

These instructions must be left with the user

INTRODUCTION

Thank you for choosing a Mira shower. To enjoy the full potential of your new shower, please take time to read this guide thoroughly, and keep it handy for future reference.

Guarantee

For **domestic installations**, Mira Showers guarantee the Mira Relate against any defect in materials or workmanship for a period of **five** years from the date of purchase (shower fittings for one year).

For **non-domestic installations**, Mira Showers guarantee the Mira Relate against any defect in materials or workmanship for a period of **one** year from the date of purchase.

Failure to follow the instructions provided with the shower will invalidate the guarantee

For terms and conditions refer to ***'Customer Service'***.

Design Registration GB 001225254-0003

Patents: GB 2 407 138

Recommended Usage	
Domestic	✓
Light Commercial	✓
Heavy Commercial	✗
Healthcare	✗

SAFETY : WARNINGS

WARNING - This product can deliver scalding temperatures if not operated, installed or maintained in accordance with the instructions, warnings and cautions contained in this guide.

The function of a thermostatic mixing valve is to deliver water consistently at a safe temperature. In keeping with every other mechanism, it cannot be considered as functionally infallible and as such, cannot totally replace a supervisor's vigilance where that is necessary. Provided it is installed, commissioned, operated and maintained within manufacturers recommendations, the risk of failure, if not eliminated, is reduced to the minimum achievable.

PLEASE OBSERVE THE FOLLOWING TO REDUCE THE RISK OF INJURY:

INSTALLING THE SHOWER

1. Installation of the shower must be carried out in accordance with these instructions by qualified, competent personnel. Read all instructions before installing the shower.
2. **DO NOT** install the shower where it may be exposed to freezing conditions. Ensure that any pipework that could become frozen is properly insulated.
3. **DO NOT** perform any unspecified modifications, drill or cut holes in the shower or fittings other than instructed by this guide. When servicing only use genuine Kohler Mira replacement parts.
4. If the shower is dismantled during installation or servicing then, upon completion, an inspection must be made to ensure all connections are tight and that there are no leaks.

USING THE SHOWER

5. The shower must be operated and maintained in accordance with the requirements of this guide. Make sure you fully understand how to operate the shower before use, read all instructions and retain this guide for future reference.
6. **DO NOT** switch the shower on if there is a possibility that the water in the shower unit or fittings is frozen.
7. The shower can be used by children aged from 8 years and above and persons with reduced physical, sensory or mental capabilities or lack of experience and knowledge if they have been given supervision or instruction concerning use of the appliance in a safe way and understand the hazards involved. Children must not be allowed to play with the shower.
8. Anyone who may have difficulty understanding or operating the controls of any shower should be attended whilst showering. Particular consideration should be given to the young, the elderly, the infirm or anyone inexperienced in the correct operation of the controls.
9. **DO NOT** allow children to clean or perform any user maintenance to the shower unit without supervision.
10. Always check the water temperature is safe before entering the shower.
11. **DO NOT** adjust the temperature control rapidly while using the shower.
12. Use caution when altering the water temperature while in use, always check the temperature before continuing to shower.
13. **DO NOT** switch the shower off and back on while standing in the water flow.
14. **DO NOT** connect the outlet of the shower to any tap, control valve, trigger handset or showerhead other than those specified for use with this shower. Only Kohler Mira recommended accessories must be used.
15. The showerhead must be descaled regularly. Any blockage of the showerhead or hose may affect showering performance.

SPECIFICATIONS

Pressures

- Max Static Pressure: **10 bar**.
- Max Maintained Pressure: **5 bar**.
- Min Maintained Pressure: (Gas Water Heater): **1.0 bar** (for optimum performance supplies should be nominally equal).
- Min Maintained Pressure (Gravity System): **0.1 bar** (0.1 bar = 1 Metre head from cold tank base to showerhead outlet).

Temperatures

- Close temperature control is provided between **20°C and 50°C**.
- Optimum Thermostatic Control Range: **35°C to 45°C** (achieved with supplies of 15°C cold, 65°C hot and nominally equal pressures).
- Recommended Hot Supply: **60°C to 65°C**.
  For safety reasons we recommended that the maximum hot water temperature does not exceed 65°C).
- Minimum Recommended Differential between Hot Supply and Outlet Temperature: **12°C at desired flow rates**.
- Minimum hot water supply temperature: **55°C**.

Thermostatic Shut-down

- For safety and comfort the thermostat will shut off the shower **within 2 Seconds** if either supply fails (achieved only if the blend temperature has a minimum differential of 12°C from either supply temperature).

Connections

- **Hot: Left -** 1/2" BSP to pipework, 3/4" BSP to shower unit.
- **Cold: Right -** 1/2" BSP to pipework, 3/4" BSP to shower unit.
- **Outlet: Bottom**, 1/2" BSP Male to flexible hose.

Note! This product does not allow for reversed inlets and will deliver unstable temperatures if fitted incorrectly.

INSTALLATION

Suitable Plumbing Systems

Gravity Fed:
The thermostatic mixer must be fed from a cold water cistern (usually fitted in the loft space) and a hot water cylinder (usually fitted in the airing cupboard) providing nominally equal pressures.

Gas Heated System:
The thermostatic mixer can be installed with a combination boiler.

Unvented Mains Pressure System:
The thermostatic mixer can be installed with an unvented, stored hot water system.

Mains Pressurised Instantaneous Hot Water System:
The thermostatic mixer can be installed with systems of this type with balanced pressures.

Pumped System:
The thermostatic mixer can be installed with an inlet pump (twin impeller). The pump must be installed on the floor next to the hot water cylinder.

General

1. Installation of the shower must be carried out in accordance with these instructions by qualified, competent personnel.
2. The plumbing installation must comply with all national or local water regulations and all relevant building regulations, or any particular regulation or practice specified by the local water supply company.
3. Make sure all pressures and temperatures comply with the requirements of the shower. See ***'Specifications'***.
4. Full bore/non restrictive isolating valves must be fitted in a readily accessible position adjacent to the shower to facilitate maintenance of the shower.
   DO NOT use a valve with a loose washer plate (jumper) as this can lead to a build up of static pressure.
5. Use copper pipe for all plumbing.
6. **DO NOT** apply excessive force to plumbing connections; always provide mechanical support when making plumbing connections. Any soldered joints should be made before connecting the shower. Pipework must be rigidly supported and avoid any strain on the connections.
7. Pipework dead-legs should be kept to a minimum.
8. The position of the shower unit and hose retaining ring must provide a minimum air gap of 25mm between the showerhead and the spill over level of any bath, shower tray or basin. There must be a minimum distance of 30mm between the showerhead and the spill over lever of any toilet, bidet or other appliance with a Fluid Category 5 backflow risk.

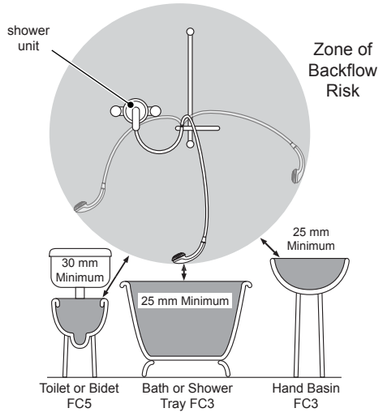

Note! There will be occasions when the hose retaining ring will not provide a suitable solution for Fluid Category 3 installations, in these instances an outlet double checkvalve must be fitted, this will increase the required supply pressure typically by 10kPa (0.1 bar). Double checkvalves fitted in the inlet supply to the appliance cause a pressure build up, which can affect the maximum static inlet pressure for the appliance and must not be fitted. For Fluid category 5 double checkvalves are not suitable.

9. Position the shower unit where the controls are at a convenient height for the user. Position the showerhead so that the water sprays in line with the bath or across the opening of a shower cubicle. The installation must not cause the shower hose to be kinked during normal use or obstruct the use of the control handles.
10. The showerhead should be positioned so that it discharges down the centre line of the bath or across the opening of a shower cubicle.
11. Only use the inlet connections supplied with the product. **DO NOT** use any other type of fittings.
12. **DO NOT** overtighten pipe connections or screws as product damage may occur.

Installing the Shower Unit

The shower unit should be installed where it will be supported by fixed pipework.

1 Install the pipework, making sure that it is set at the correct distance apart (150 ± 24 mm) **and solidly fixed**.

2 Apply suitable thread sealant (not supplied) and attach the offset connectors to the pipework in the wall. The offset connectors must protrude between 40 and 43 mm from the finished wall.

Note! Connections are: **Hot-Left**, **Cold-Right**. This is very important as this product does not allow for reversed inlets.

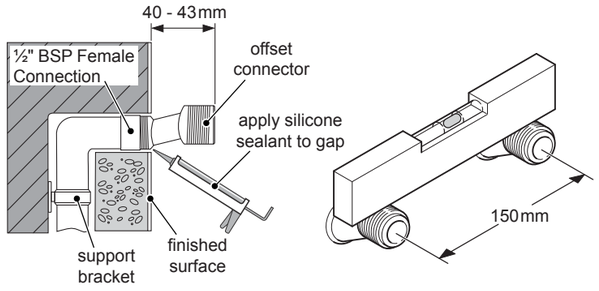

3 Tighten the offset connectors using a suitable spanner. Make sure that the connectors are level and set at the correct distance apart, using the shower unit as a guide to spacing.

4 Screw the concealing plates onto the offset connectors until they come into contact with the wall.

Flush the water supplies thoroughly before attaching the shower unit.

5 Fit a sealing washer/filter in each inlet of the shower unit and attach to the offset connectors. Avoid damage to the chrome surfaces when tightening the connections.

Pressurise the shower unit and check all connections for leaks

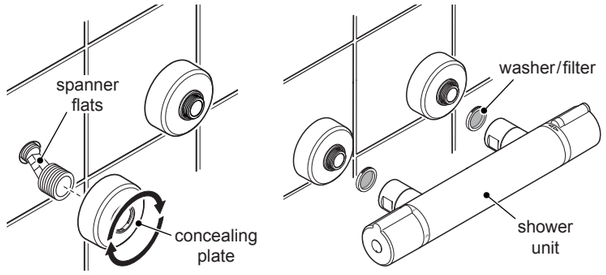

Installing the Shower Fittings

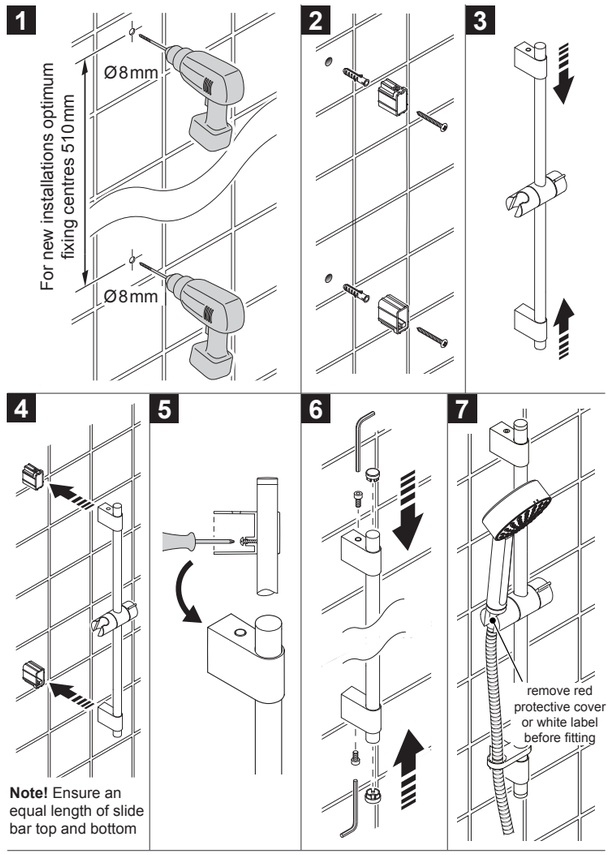

8 A flow regulator may be required for installation on high pressure systems (above 0.5bar). Two 12 L/min flow regulators are provided, please refer to the flow regulator pack for more information.

Connecting the Shower Hose

9 The shower hose has slightly different sized conical connections at each end (the smaller diameter / longer length conical is identified with a **Red** protective cover or **White** label).

Fit the end with the red cover or white label to the showerhead, fit the clear end to the shower unit.