INCEPTOR® ACE

Technical Specification

Product Code: OV102150BKCWPC

Description: 150W LED Asymmetric Floodlight With Photocell - IP65 - 4000K - Black



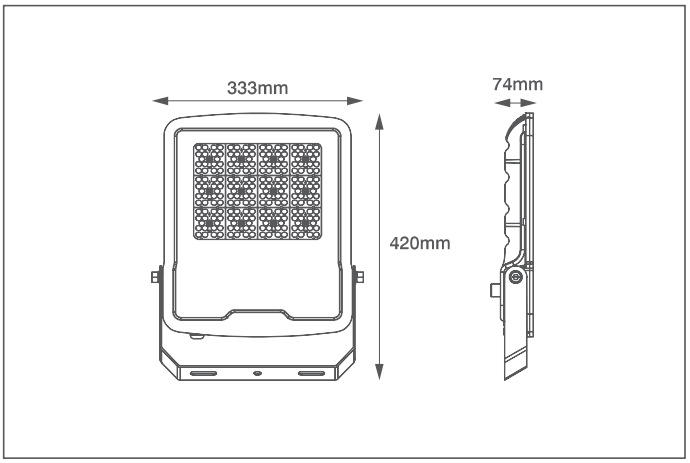

General Information

Dimensions (mm)	333 (W) x 420 (H) x 51 (D)
Materials	Body: Powdercoated Aluminium Diffuser: Glass
Finish	Black (RAL 9004)
Product Weight (Kg)	4.02
Ingress Protection	IP65
Impact Rating (IK)	06
Warranty (Years)	5

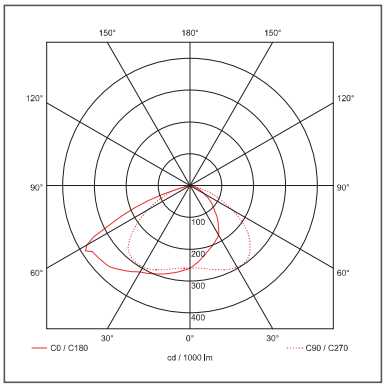

Supply & Power Information

Input Voltage & Frequency (V~ / Hz)	220-240 50/60
Safety Class	I
Circuit Wattage (W)	150
LED Wattage (W)	150
Input Current (mA)	830
Inrush Current/Time	50A (500μS)
Power Factor	>0.9
Operating Temperature (°C)	-20 to +40
Critical Temperature (°C)	+50
Input Mains Cable	3 x 1mm² H05-RNF (2 metre)

Luminaire Output

Colour Temperature (K)	4000
Colour Render Index (CRI)	>80
Efficacy (lm/W)	120
Beam Angle (°)	60 x 120
LED Lifetime (L70) (Hours)	50,000

Sensor Information

Ambient Light 'On' (Lux)	10
Ambient Light 'OFF' (Lux)	30 to 60

Dimming Information

Dimmable	No
Dimming Format	Non-Dimmable

WARRANTY 5 YEARS · IP65 · LIGHT CONTROL SENSOR

CE UK CA

OVIA Limited, Scolmore House, Mariner, Lichfield Road Industrial Estate,
Tamworth, Staffordshire, B79 7UL United Kingdom
T: +44 (0)1827 300640
E: sales@oviaUK.com | **W:** oviaUK.com

Errors & Omissions excluded.
Specification is subject to change without notice.