Data sheet



PBT-RB1X0SG1SSNAMA0Z

PBT

PRESSURE SENSORS

SICK
Sensor Intelligence.



Illustration may differ

Ordering information

Type	part no.
PBT-RB1X0SG1SSNAMA0Z	6038716

Other models and accessories ➜ www.sick.com/PBT

Detailed technical data

Features

Medium	Liquid, gaseous
Pressure type	Gauge pressure
Pressure unit	bar
Measuring range	0 bar ... 1 bar
Process temperature	0 °C ... +80 °C
Maximum ohmic load R_A	4 mA ... 20 mA, 2-wire ($R_A \leq (L^+ - 8\ V) / 0.02\ A$ [Ohm]), 0 V ... 10 V, 3-wire (R_A > 10 kOhm), 0 V ... 5 V, 3-wire (R_A > 5 kOhm)
Output signal	4 mA ... 20 mA, 2-wire

Mechanics/electronics

Communication interface	-
Process connection	G ¼ A (ISO 1179-2)
Wetted parts	Process connection: 316L stainless steel Measuring chamber: stainless steel 316L
Internal transmission fluid	Silicone oil (only with pressure ranges < 0 bar ... 10 bar and ≤ 0 bar abs ... 25 bar abs)
Pressure port	Standard
Housing material	Stainless steel
Connection type	M12 round connector x 1, 4-pin
Supply voltage	8 V DC ... 30 V DC [1]
Power consumption	Signal current (max. 25 mA) for current output Max. 8 mA for voltage output signal
Electrical safety	Overvoltage protection: 32 V DC, 36 V DC with 4 mA ... 20 mA Short-circuit protection: Q_A towards M Reverse polarity protection: L^+ to M Protection class: III
Isolation voltage	500 V DC
CE-conformity	Pressure equipment directive: 2014/68/EU, EMC directive: 2014/30/EU, EN 61 326-2-3

[1] The pressure transmitter must be supplied with power by a limited energy circuit compliant with 9.3 of UL/EN/IEC 601010-1 or LPS to UL/EN/IEC 60950-1 or Class 2 to UL 1310/UL1585 (NEC or CEC). The power supply must be suitable for operation above 2,000 m if the pressure transmitter is used above this altitude.

[2] Enclosure rating IP per IEC 60529. The enclosure rating classes specified only apply when connected with female connectors that provide the corresponding enclosure rating.

Weight sensor	Approx. 80 g
Seal	NBR
Enclosure rating	IP67 [2]
Protection class III	✓
MTTF	815 years
Pressure peak dampening	Through integrated pressure port 0.6 mm or 0.3 mm for process connection G ¼ according to DIN 3852-E (0.3 mm at and above 10 bar)
Overvoltage protection	36 V DC

[1] The pressure transmitter must be supplied with power by a limited energy circuit compliant with 9.3 of UL/EN/IEC 601010-1 or LPS to UL/EN/IEC 60950-1 or Class 2 to UL 1310/UL1585 (NEC or CEC). The power supply must be suitable for operation above 2,000 m if the pressure transmitter is used above this altitude.
[2] Enclosure rating IP per IEC 60529. The enclosure rating classes specified only apply when connected with female connectors that provide the corresponding enclosure rating.

Performance

Non-linearity	≤ ± 0.5 %, (Best Fit Straight Line, BFSL) according to IEC 61298-2
Accuracy	≤ ± 1 %, of the span (including non-linearity, hysteresis, zero point and full scale error (corresponds to error of measurement as per IEC 61298-2))
Adjustment accuracy of zero signal	≤ 0.5 % of span typ., ≤ 0.8 % of span max. (with non-linerarity 0.5 %)
Hysteresis	≤ 0.16 % of the span
Non-repeatability	≤ 0.1 % of the span
Response time	< 4 ms
Signal noise	≤ 0.3 % of the span
Long-term drift/one-year stability	≤ 0.1 % of span to IEC 61298-2
Rated temperature range	0 °C ... +80 °C
Service life	Minimum 100 Mio. load cycles
Temperature error	≤ ± 1.0% of the range, typ., ≤ ± 2.5% of the range max.
Reference conditions	Reference conditions: According to IEC 61298-1

Ambient data

Ambient temperature, operation	0 °C ... +80 °C
Storage temperature	–40 °C ... +70 °C
Relative humidity	45 % ... 75 %
Shock load	500 g according to IEC 60068-2-27 (mechanical shock)
Vibration load	10 g according to IEC 60068-2-6 (vibration under resonance) 20 g optional

Certificates

EU declaration of conformity	✓
UK declaration of conformity	✓
China RoHS	✓
cULus certificate	✓

Classifications

ECLASS 5.0	27200614
ECLASS 5.1.4	27200614
ECLASS 6.0	27200614

ECLASS 6.2	27200614
ECLASS 7.0	27200614
ECLASS 8.0	27200614
ECLASS 8.1	27200614
ECLASS 9.0	27200614
ECLASS 10.0	27200614
ECLASS 11.0	27200614
ECLASS 12.0	27200614
ETIM 5.0	EC011478
ETIM 6.0	EC011478
ETIM 7.0	EC011478
ETIM 8.0	EC011478
UNSPSC 16.0901	41112410

Dimensional drawing G ¼ A DIN 3852-E

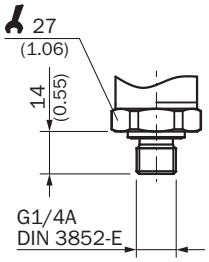

Dimensions in mm (inch)

Dimensional drawing Housing with circular connector M12 x 1, IP67

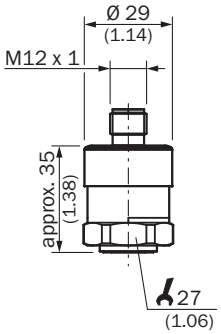

Dimensions in mm (inch)

Connection type

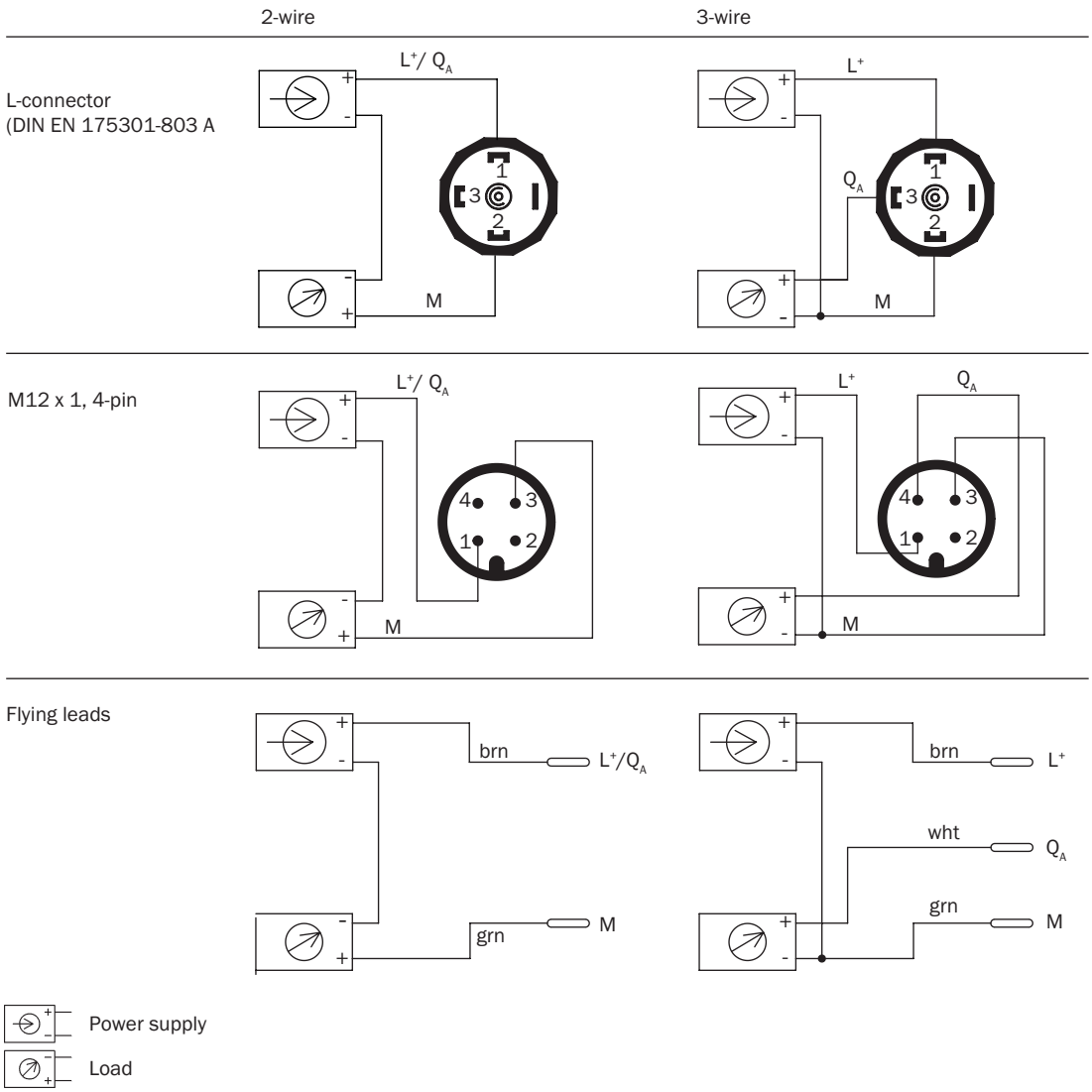

Recommended accessories

Other models and accessories → www.sick.com/PBT

	Brief description	Type	part no.
Mounting systems			
	• **Description:** Mounting bracket for simple and stable wall mounting of pressure sensors with 27 mm hexagon • **Material:** Aluminum • **Details:** Aluminum	BEF-FL-ALUPBS-HLDR	5322501

	Brief description	Type	part no.
connectors and cables			
	• **Connection type head A:** Female connector, M12, 4-pin, straight, A-coded • **Connection type head B:** Flying leads • **Signal type:** Sensor/actuator cable • **Cable:** 15 m, 4-wire, PUR, halogen-free • **Description:** Sensor/actuator cable, unshielded • **Application:** Uncontaminated zones, Zones with oils and lubricants, Robot, Drag chain operation	YF2A14-150UB3XLEAX	2095610
	• **Connection type head A:** Female connector, M12, 4-pin, straight, A-coded • **Connection type head B:** Flying leads • **Signal type:** Sensor/actuator cable • **Cable:** 20 m, 4-wire, PUR, halogen-free • **Description:** Sensor/actuator cable, unshielded • **Application:** Uncontaminated zones, Zones with oils and lubricants, Robot, Drag chain operation	YF2A14-200UB3XLEAX	2095611
	• **Connection type head A:** Female connector, M12, 4-pin, straight, A-coded • **Connection type head B:** Flying leads • **Signal type:** Sensor/actuator cable • **Cable:** 25 m, 4-wire, PUR, halogen-free • **Description:** Sensor/actuator cable, unshielded • **Application:** Uncontaminated zones, Zones with oils and lubricants, Robot, Drag chain operation	YF2A14-250UB3XLEAX	2095615
	• **Connection type head A:** Female connector, M12, 4-pin, angled, A-coded • **Connection type head B:** Flying leads • **Signal type:** Sensor/actuator cable • **Cable:** 15 m, 4-wire, PUR, halogen-free • **Description:** Sensor/actuator cable, unshielded • **Application:** Uncontaminated zones, Zones with oils and lubricants, Robot, Drag chain operation	YG2A14-150UB3XLEAX	2095769
	• **Connection type head A:** Female connector, M12, 4-pin, angled, A-coded • **Connection type head B:** Flying leads • **Signal type:** Sensor/actuator cable • **Cable:** 20 m, 4-wire, PUR, halogen-free • **Description:** Sensor/actuator cable, unshielded • **Application:** Uncontaminated zones, Zones with oils and lubricants, Robot, Drag chain operation	YG2A14-200UB3XLEAX	2095770
	• **Connection type head A:** Female connector, M12, 4-pin, angled, A-coded • **Connection type head B:** Flying leads • **Signal type:** Sensor/actuator cable • **Cable:** 25 m, 4-wire, PUR, halogen-free • **Description:** Sensor/actuator cable, unshielded • **Application:** Uncontaminated zones, Zones with oils and lubricants, Robot, Drag chain operation	YG2A14-250UB3XLEAX	2095771
	• **Connection type head A:** Female connector, M12, 4-pin, straight, A-coded • **Connection type head B:** Flying leads • **Signal type:** Sensor/actuator cable • **Cable:** 10 m, 4-wire, PVC • **Description:** Sensor/actuator cable, unshielded • **Application:** Zones with chemicals, Uncontaminated zones	YF2A14-100VB3XLEAX	2096236
	• **Connection type head A:** Female connector, M12, 4-pin, straight, A-coded • **Connection type head B:** Flying leads • **Signal type:** Sensor/actuator cable • **Cable:** 5 m, 4-wire, PVC • **Description:** Sensor/actuator cable, unshielded • **Application:** Zones with chemicals, Uncontaminated zones	YF2A14-050VB3XLEAX	2096235
	• **Connection type head A:** Female connector, M12, 4-pin, angled, A-coded • **Connection type head B:** Flying leads • **Signal type:** Sensor/actuator cable • **Cable:** 2 m, 4-wire, PVC • **Description:** Sensor/actuator cable, unshielded • **Application:** Zones with chemicals, Uncontaminated zones	YG2A14-020VB3XLEAX	2095895
	• **Connection type head A:** Female connector, M12, 4-pin, straight, A-coded • **Connection type head B:** Flying leads • **Signal type:** Sensor/actuator cable • **Cable:** 15 m, 4-wire, PVC • **Description:** Sensor/actuator cable, unshielded • **Application:** Zones with chemicals, Uncontaminated zones	YF2A14-150VB3XLEAX	2096237
	• **Connection type head A:** Female connector, M12, 4-pin, straight, A-coded • **Connection type head B:** Flying leads • **Signal type:** Sensor/actuator cable • **Cable:** 20 m, 4-wire, PVC • **Description:** Sensor/actuator cable, unshielded	YF2A14-200VB3XLEAX	2096238

	Brief description	Type	part no.
	• **Application:** Zones with chemicals, Uncontaminated zones		
	• **Connection type head A:** Female connector, M12, 4-pin, straight, A-coded • **Connection type head B:** Flying leads • **Signal type:** Sensor/actuator cable • **Cable:** 10 m, 4-wire, PUR, halogen-free • **Description:** Sensor/actuator cable, unshielded • **Application:** Uncontaminated zones, Zones with oils and lubricants, Robot, Drag chain operation	YF2A14-100UB3XLEAX	2095609
	• **Connection type head A:** Female connector, M12, 4-pin, angled, A-coded • **Connection type head B:** Flying leads • **Signal type:** Sensor/actuator cable • **Cable:** 2 m, 4-wire, PUR, halogen-free • **Description:** Sensor/actuator cable, unshielded • **Application:** Uncontaminated zones, Zones with oils and lubricants, Robot, Drag chain operation	YG2A14-020UB3XLEAX	2095766
	• **Connection type head A:** Female connector, M12, 4-pin, angled, A-coded • **Connection type head B:** Flying leads • **Signal type:** Sensor/actuator cable • **Cable:** 5 m, 4-wire, PUR, halogen-free • **Description:** Sensor/actuator cable, unshielded • **Application:** Uncontaminated zones, Zones with oils and lubricants, Robot, Drag chain operation	YG2A14-050UB3XLEAX	2095767
	• **Connection type head A:** Female connector, M12, 4-pin, angled, A-coded • **Connection type head B:** Flying leads • **Signal type:** Sensor/actuator cable • **Cable:** 10 m, 4-wire, PUR, halogen-free • **Description:** Sensor/actuator cable, unshielded • **Application:** Uncontaminated zones, Zones with oils and lubricants, Robot, Drag chain operation	YG2A14-100UB3XLEAX	2095768
	• **Connection type head A:** Female connector, M12, 4-pin, straight, A-coded • **Connection type head B:** Flying leads • **Signal type:** Sensor/actuator cable • **Cable:** 2 m, 4-wire, PUR, halogen-free • **Description:** Sensor/actuator cable, unshielded • **Application:** Uncontaminated zones, Zones with oils and lubricants, Robot, Drag chain operation	YF2A14-020UB3XLEAX	2095607
	• **Connection type head A:** Female connector, M12, 4-pin, straight, A-coded • **Connection type head B:** Flying leads • **Signal type:** Sensor/actuator cable • **Cable:** 2 m, 4-wire, PVC • **Description:** Sensor/actuator cable, unshielded • **Application:** Zones with chemicals, Uncontaminated zones	YF2A14-020VB3XLEAX	2096234
	• **Connection type head A:** Female connector, M12, 4-pin, angled, A-coded • **Connection type head B:** Flying leads • **Signal type:** Sensor/actuator cable • **Cable:** 10 m, 4-wire, PVC • **Description:** Sensor/actuator cable, unshielded • **Application:** Zones with chemicals, Uncontaminated zones	YG2A14-100VB3XLEAX	2095898
	• **Connection type head A:** Female connector, M12, 4-pin, angled, A-coded • **Connection type head B:** Flying leads • **Signal type:** Sensor/actuator cable • **Cable:** 15 m, 4-wire, PVC • **Description:** Sensor/actuator cable, unshielded • **Application:** Zones with chemicals, Uncontaminated zones	YG2A14-150VB3XLEAX	2096213
	• **Connection type head A:** Female connector, M12, 4-pin, angled, A-coded • **Connection type head B:** Flying leads • **Signal type:** Sensor/actuator cable • **Cable:** 20 m, 4-wire, PVC • **Description:** Sensor/actuator cable, unshielded • **Application:** Zones with chemicals, Uncontaminated zones	YG2A14-200VB3XLEAX	2096214
	• **Connection type head A:** Female connector, M12, 4-pin, angled, A-coded • **Connection type head B:** Flying leads • **Signal type:** Sensor/actuator cable • **Cable:** 5 m, 4-wire, PVC • **Description:** Sensor/actuator cable, unshielded • **Application:** Zones with chemicals, Uncontaminated zones	YG2A14-050VB3XLEAX	2095897
	• **Connection type head A:** Female connector, M12, 4-pin, straight, A-coded • **Connection type head B:** Flying leads • **Signal type:** Sensor/actuator cable • **Cable:** 0.6 m, 4-wire, PUR, halogen-free • **Description:** Sensor/actuator cable, unshielded	YF2A14-C60UB3XLEAX	2145654

	Brief description	Type	part no.
	• **Application:** Uncontaminated zones, Zones with oils and lubricants, Robot, Drag chain operation		
	• **Connection type head A:** Female connector, M12, 4-pin, straight, A-coded • **Connection type head B:** Flying leads • **Signal type:** Sensor/actuator cable • **Cable:** 1 m, 4-wire, PUR, halogen-free • **Description:** Sensor/actuator cable, unshielded • **Application:** Uncontaminated zones, Zones with oils and lubricants, Robot, Drag chain operation	YF2A14-010UB3XLEAX	2145655
	• **Connection type head A:** Female connector, M12, 4-pin, straight, A-coded • **Connection type head B:** Flying leads • **Signal type:** Sensor/actuator cable • **Cable:** 3 m, 4-wire, PUR, halogen-free • **Description:** Sensor/actuator cable, unshielded • **Application:** Uncontaminated zones, Zones with oils and lubricants, Robot, Drag chain operation	YF2A14-030UB3XLEAX	2145656
	• **Connection type head A:** Female connector, M12, 4-pin, angled, A-coded • **Connection type head B:** Flying leads • **Signal type:** Sensor/actuator cable • **Cable:** 0.6 m, 4-wire, PUR, halogen-free • **Description:** Sensor/actuator cable, unshielded • **Application:** Uncontaminated zones, Zones with oils and lubricants, Robot, Drag chain operation	YG2A14-C60UB3XLEAX	2145657
	• **Connection type head A:** Female connector, M12, 4-pin, angled, A-coded • **Connection type head B:** Flying leads • **Signal type:** Sensor/actuator cable • **Cable:** 1 m, 4-wire, PUR, halogen-free • **Description:** Sensor/actuator cable, unshielded • **Application:** Uncontaminated zones, Zones with oils and lubricants, Robot, Drag chain operation	YG2A14-010UB3XLEAX	2145658
	• **Connection type head A:** Female connector, M12, 4-pin, angled, A-coded • **Connection type head B:** Flying leads • **Signal type:** Sensor/actuator cable • **Cable:** 0.6 m, 4-wire, PVC • **Description:** Sensor/actuator cable, unshielded • **Application:** Zones with chemicals, Uncontaminated zones	YG2A14-C60VB3XLEAX	2145709
	• **Connection type head A:** Female connector, M12, 4-pin, angled, A-coded • **Connection type head B:** Flying leads • **Signal type:** Sensor/actuator cable • **Cable:** 1 m, 4-wire, PVC • **Description:** Sensor/actuator cable, unshielded • **Application:** Zones with chemicals, Uncontaminated zones	YG2A14-010VB3XLEAX	2145710
	• **Connection type head A:** Female connector, M12, 4-pin, straight, A-coded • **Connection type head B:** Flying leads • **Signal type:** Sensor/actuator cable • **Cable:** 0.6 m, 4-wire, PVC • **Description:** Sensor/actuator cable, unshielded • **Application:** Zones with chemicals, Uncontaminated zones	YF2A14-C60VB3XLEAX	2145707
	• **Connection type head A:** Female connector, M12, 4-pin, straight, A-coded • **Connection type head B:** Flying leads • **Signal type:** Sensor/actuator cable • **Cable:** 1 m, 4-wire, PVC • **Description:** Sensor/actuator cable, unshielded • **Application:** Zones with chemicals, Uncontaminated zones	YF2A14-010VB3XLEAX	2145708

SICK AT A GLANCE

SICK is one of the leading manufacturers of intelligent sensors and sensor solutions for industrial applications. A unique range of products and services creates the perfect basis for controlling processes securely and efficiently, protecting individuals from accidents and preventing damage to the environment.

We have extensive experience in a wide range of industries and understand their processes and requirements. With intelligent sensors, we can deliver exactly what our customers need. In application centers in Europe, Asia and North America, system solutions are tested and optimized in accordance with customer specifications. All this makes us a reliable supplier and development partner.

Comprehensive services complete our offering: SICK LifeTime Services provide support throughout the machine life cycle and ensure safety and productivity.

For us, that is “Sensor Intelligence.”

WORLDWIDE PRESENCE:

Contacts and other locations –www.sick.com