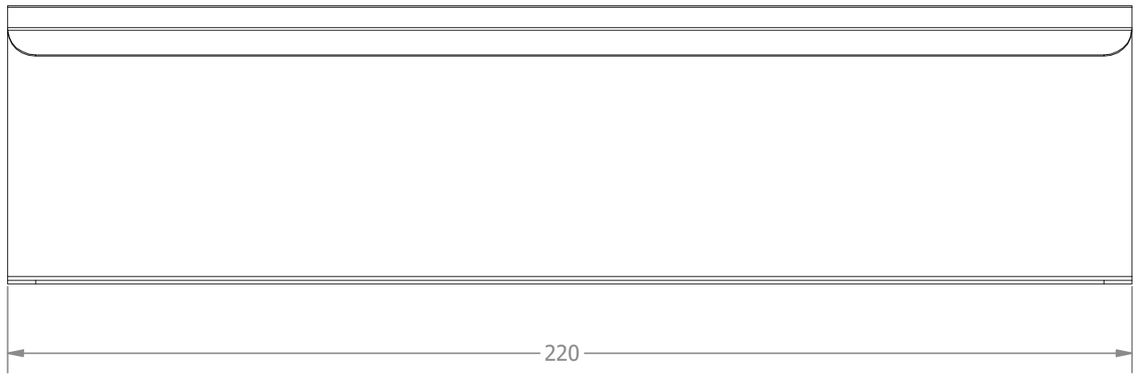

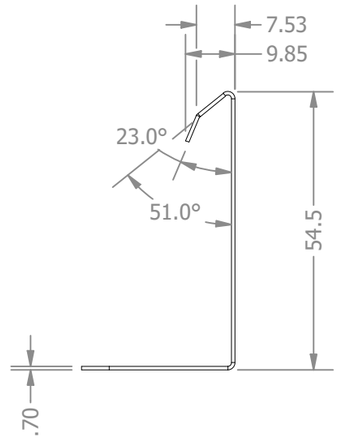

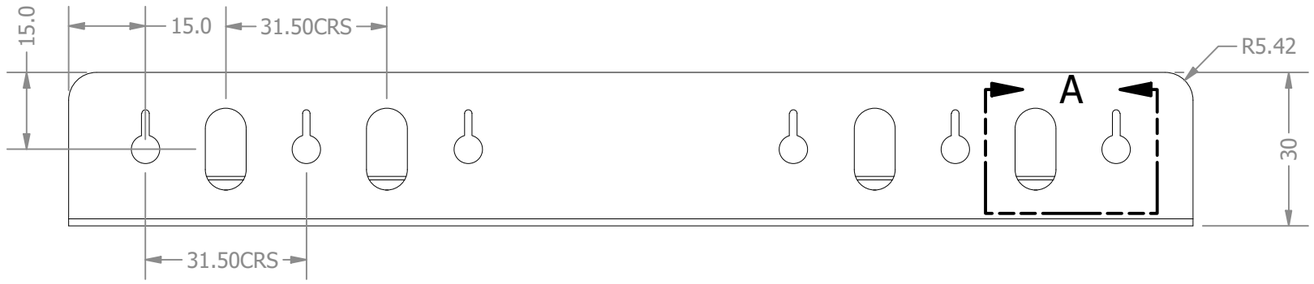

DETAIL A
SCALE 2 : 1

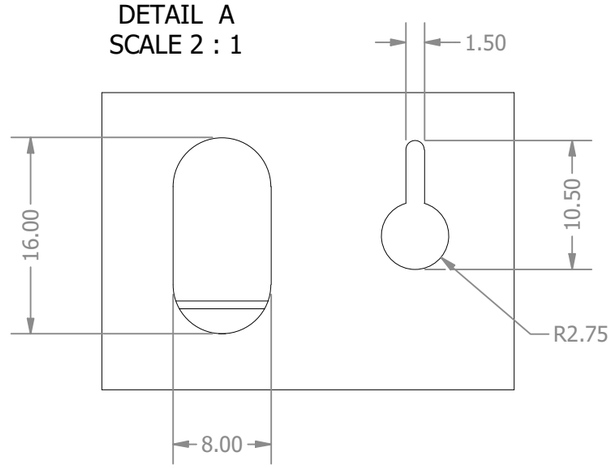

Flat Pattern

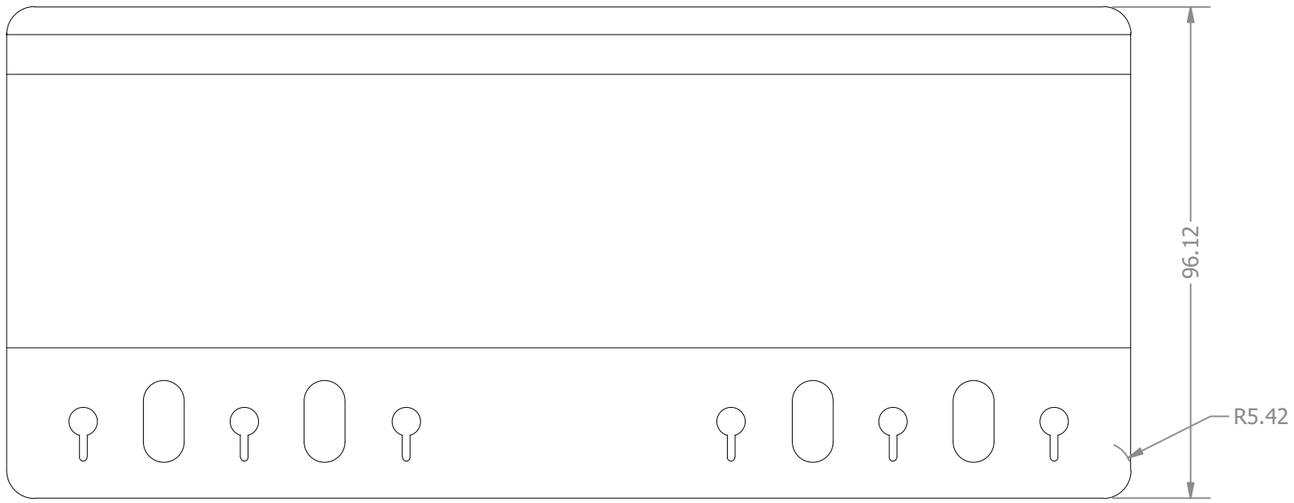

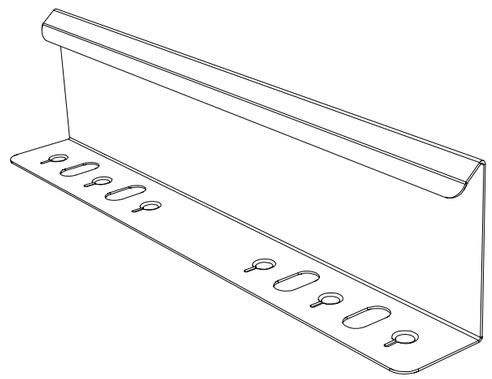

1ST ANGLE PROJ.	**Scale:** 1:1	TAMLEX - HARCOURT, HALESFIELD 15, TELFORD, SHROPSHIRE, TF7 4ER. TEL.: 01952 586689 - WWW.TAMLEX.CO.UK	**DRG. No.**	**ISSUE**
Drawn: A.M.	**Date:** 10.10.23	**DESCRIPTION:** HEAVY DUTY TRAY COUPLER	HDTC	A
Checked: A.M.	**Date:**			
Approved: S.C.	**Date:**	**Material:** 0.7 mm Galv. Steel — **Finish:** Pre - galvanized steel		
ALL DIMENSIONS IN MILLIMETERS UNLESS STATED TOLERANCES UNLESS OTHERWISE STATED	X = ±1	X.X = ±0.30	X.XX = ±0.10	**Library:** Data/Tamlex L./Inventor/HDTC
Modification:				