Tamlite Lighting
Data Sheet

Order Code: AST110NW

ASTRO Recessed downlight 10W - 4000K - Fixed output

IP54 | IK04 | 5 YR

Features

- Efficacy - 110 lm/W
- High output LED downlight suitable for corridors and toilets
- CRI: Ra>80
- Low glare TP(a) rated opal diffuser
- Up to 110 lumens per Watt efficacy

Construction

- Die-cast aluminium body finished in white (RAL 9010)
- Opal Polycarbonate TP(a) diffuser
- Remote driver
- Supplied as standard with neutral white (4000K) LED

Installation Notes

Recessed into plasterboard or exposed grid ceiling via spring clips and wired to 3-way connection on driver

To Specify

ASTRO Recessed downlight 10W - 4000K - Fixed output as per Tamlite ASTRO range.

Technical Data

General

Luminaire Wattage (W)	10
Weight (kg)	0.75
Operating Temperature (ta °C)	0-25°

Light Output

Lumens (lm)	1100
Efficacy (lm/W)	110
Beam Angle (FWHM°)	95

Life

L90 Lifetime (HRS)	20000
L80 Lifetime (HRS)	41000
L70 Lifetime (HRS)	54000

Electrical

Power Factor (pf)	0.91
Input Voltage Range (VAC)	220-240
Inrush Current Peak (A)	20.4
Surge Protection (kV)	1
Terminal Type	2-pole grip-wire

LED

CCT (K)	4000
CRI	80
Macadam Elipses	<4

Driver

Driver Lifetime (HRS)	50000

Tamlite Technical
Stafford Park 12
Telford, Shropshire,
TF3 3BJ

T: +44 (0)1952 292441
E: technical@tamlite.co.uk
W: www.tamlitelighting.co.uk

Generated on: 09/08/2022 8:02am
Produced by Tamlite Lighting

Tamlite Lighting
Data Sheet

Photometrics

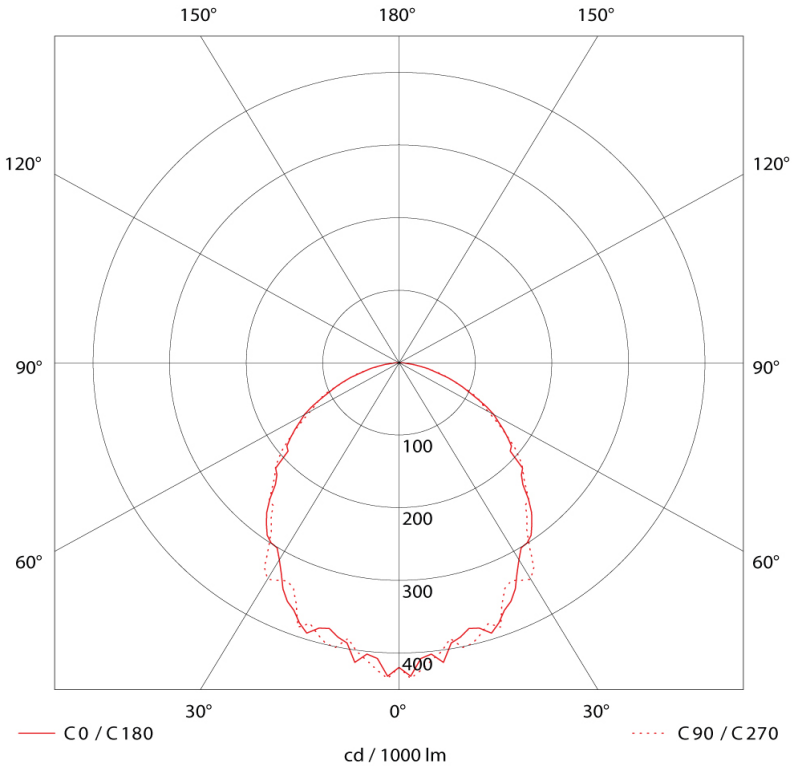

Dimensions

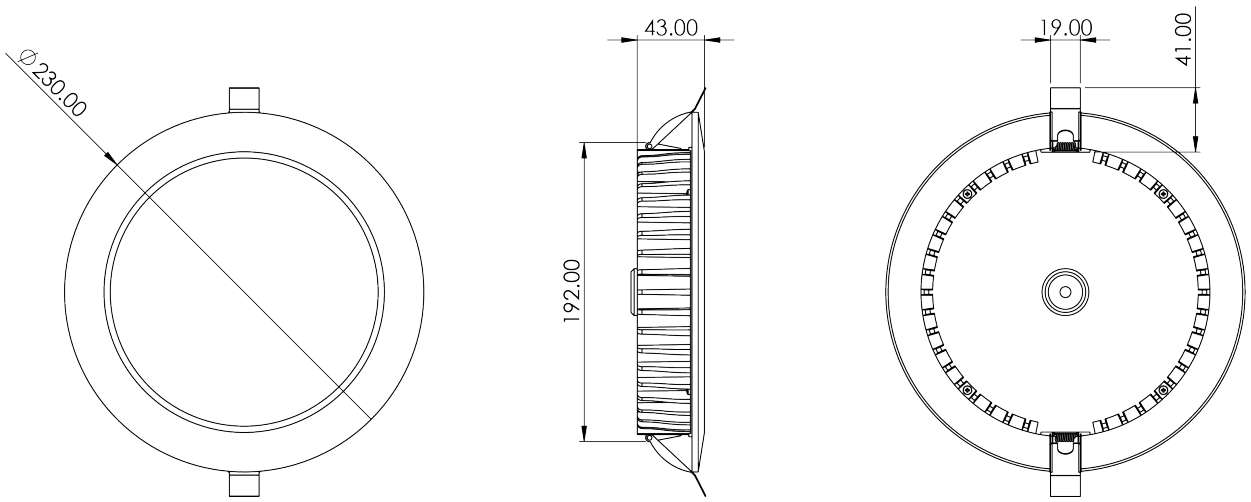

Tamlite Technical
Stafford Park 12
Telford, Shropshire,
TF3 3BJ

T: +44 (0)1952 292441
E: technical@tamlite.co.uk
W: www.tamlitelighting.co.uk