Tamlite Lighting
Data Sheet

Order Code: CRC500NW

CIRCA 34W - 4000K - Fixed output

IP20 IK06 7 YRS

Features

- Suitable for large atriums, entrances and retail spaces
- Available in 5 outputs
- Available with Vision presence/photocell and presence/daylight dimming sensor
- Tamlite I-Tech opal diffuser in polycarbonate that greatly reduces LED spotting for uniform appearance
- 4 point wire suspension from central fixing point
- Gear options including DALI and emergency available
- Modern stylish design
- Spun aluminium body and front plate in white (RAL 9016)
- Unique power entry access for easy and quick installation
- CRI: Ra>80
- Up to 147 lumens per Watt efficacy

Construction

- Made in Britain

To Specify

CIRCA 34W - 4000K - Fixed output as per Tamlite CIRCA range.

Technical Data

General

Luminaire Wattage (W)	34
Weight (kg)	3.79
Operating Temperature (ta °C)	0°C - 25°C

Light Output

Lumens (lm)	5000
Efficacy (lm/W)	147

Life

L90 Lifetime (HRS)	53000
L80 Lifetime (HRS)	72000
L70 Lifetime (HRS)	72000

Electrical

Rated Input Current (A)	0.16
Power Factor (pf)	0.94
Input Voltage Range (VAC)	198 - 264 V
Surge Protection (kV)	1
Total Harmonic Distortion (THD)	<10%
Output LF Ripple	± 5 %
Conductor Size (mm)	0.5 - 1.5 mm²
Terminal Type	PIANO 3

LED

CCT (K)	4000
CRI	>80
Macadam Elipses	3

Driver

Driver Current (mA)	325
Forward Voltage (V)	120-132
Driver Lifetime (HRS)	100000

Tamlite Technical
Stafford Park 12
Telford, Shropshire,
TF3 3BJ

T: +44 (0)1952 292441
E: technical@tamlite.co.uk
W: www.tamlite.co.uk

Generated on: 04/07/2023 10:17am
Produced by Tamlite Lighting

Tamlite Lighting
Data Sheet

Photometrics

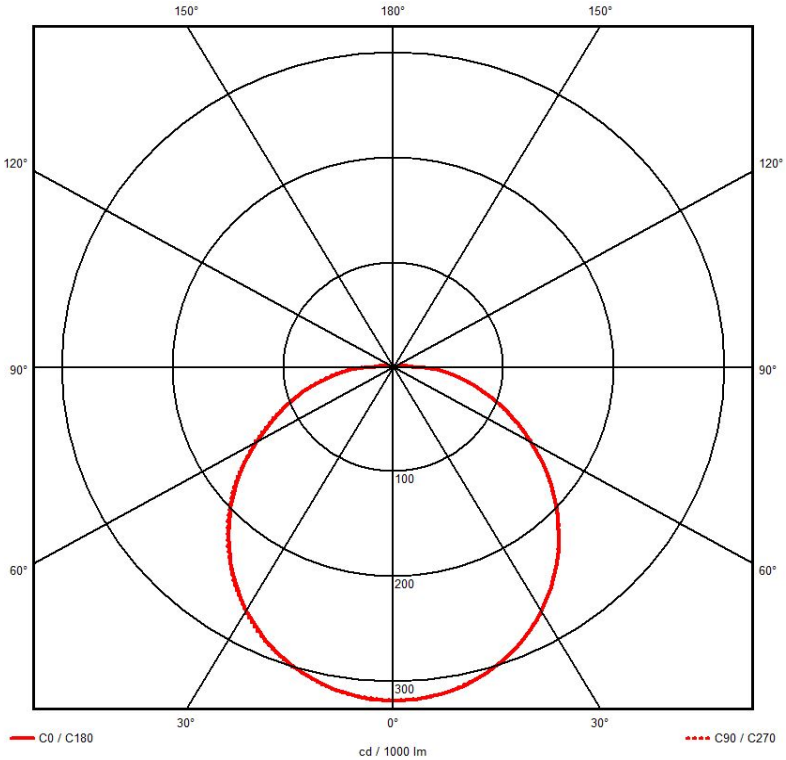

	C0	C90	C180
0°	318	318	318
10°	312	312	311
20°	295	295	294
30°	268	268	267
40°	232	232	231
50°	190	190	190
60°	144	144	144
70°	101	101	101
80°	62	62	61
90°	21	21	21
100°	10	11	10
110°	3	5	3
120°	1	3	1
130°	1	2	1
140°	1	1	1
150°	1	1	1
160°	1	1	1
170°	2	2	2
180°	2	2	2
	cd / 1000 lm		

Dimensions

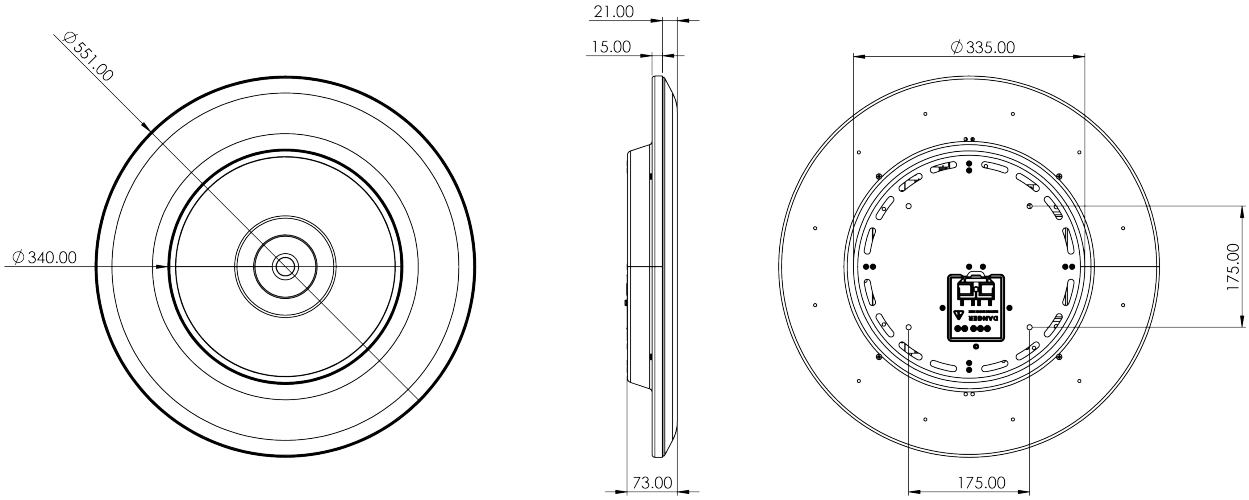

Tamlite Technical
Stafford Park 12
Telford, Shropshire,
TF3 3BJ

T: +44 (0)1952 292441
E: technical@tamlite.co.uk
W: www.tamlite.co.uk