Tamlite Lighting
Data Sheet

Order Code: FRN400T4NWG

FRONTIER Floodlight Grey 30W - T4 Area Optic - Fixed Output - 4000K

IP66 IK08 5 YR

Features

- High performance floodlight suitable for car parking and sports applications
- Lightweight design enables install on light duty columns

Construction

- Die-cast aluminium body finished in grey (RAL 9006)
- Integral driver
- Supplied as standard with neutral white (4000K) LED

To Specify

FRONTIER Floodlight Grey 30W - T4 Area Optic - Fixed Output - 4000K as per Tamlite FRONTIER range.

Technical Data

General

Luminaire Wattage (W)	30
Weight (kg)	1.95
Operating Temperature (°C)	-20° to 25°

Light Output

Lumens (lm)	4000
Efficacy (lm/W)	133
Beam Angle (FWHM°)	150

Life

L90 Lifetime (HRS)	60000
L80 Lifetime (HRS)	84000
L70 Lifetime (HRS)	84000

Electrical

Rated Input Current (A)	0.14
Power Factor (pf)	0.96
Input Voltage Range (VAC)	100-277
Inrush Current Peak (A)	200
Surge Protection (kV)	10
Total Harmonic Distortion (THD)	9
Output LF Ripple	5
Conductor Size (mm)	1

LED

CCT (K)	4000
CRI	80
Macadam Elipses	3

Driver

Driver Current (mA)	760
Forward Voltage (V)	34.8

Tamlite Technical
Stafford Park 12
Telford, Shropshire,
TF3 3BJ

T: +44 (0)1952 292441
E: technical@tamlite.co.uk
W: www.tamlite.co.uk

Photometrics

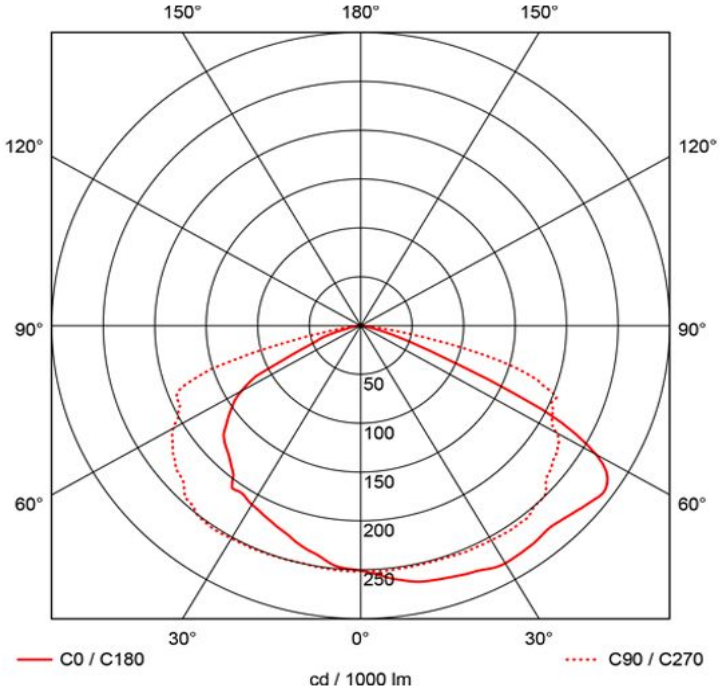

Dimensions

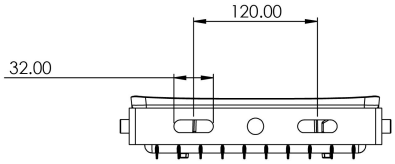

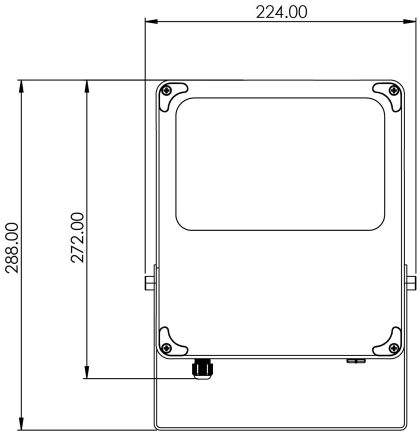

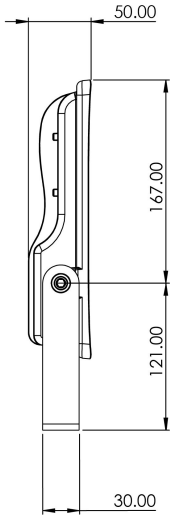

Tamlite Technical
Stafford Park 12
Telford, Shropshire,
TF3 3BJ

T: +44 (0)1952 292441
E: technical@tamlite.co.uk
W: www.tamlite.co.uk