Tamlite Lighting
Data Sheet

Order Code: TBX5730NWM3

TBX Batten 50W - 4000K - Fixed output - Emergency



Industrial Product of the Year

IP20 | IK06 | 5 YR

Features

- Efficacy - 146 lm/W
- Suitable for general use in industrial-warehousing or commercial applications
- CRI: Ra>80

Construction

- Steel body finished in white (RAL 9010)
- Opal diffuser for wide beam distribution
- Opal Polycarbonate TP(a) diffuser
- Integral driver
- Polycarbonate end caps
- Supplied as standard with neutral white (4000K) LED

Installation Notes

Surface mount via rear entry BESA fixings or suspended via 3.0m wire suspension kit

To Specify

TBX Batten 50W - 4000K - Fixed output - Emergency as per Tamlite TBX range.

Technical Data

General

Luminaire Wattage (W)	50
Weight (kg)	1.60
Operating Temperature (ta °C)	5° - 25°

Light Output

Lumens (lm)	7300
Efficacy (lm/W)	146
Beam Angle (FWHM°)	122

Life

L90 Lifetime (HRS)	20000
L80 Lifetime (HRS)	41000
L70 Lifetime (HRS)	54000

Electrical

Rated Input Current (A)	0.22
Power Factor (pf)	0.97
Input Voltage Range (VAC)	220-240
Inrush Current Peak (A)	50
Surge Protection (kV)	1
Total Harmonic Distortion (THD)	<5%
Output LF Ripple	±5%
Conductor Size (mm)	0.5 - 2.5
Terminal Type	4-pole grip-wire

LED

CCT (K)	4000
CRI	80
Macadam Elipses	<3

Driver

Driver Current (mA)	1050
Forward Voltage (V)	36-46
Driver Lifetime (HRS)	100000

Emergency

Emergency Lumen Operating	210
Emergency Wattage (W)	2

Tamlite Technical
Stafford Park 12
Telford, Shropshire,
TF3 3BJ

T: +44 (0)1952 292441
E: technical@tamlite.co.uk
W: www.tamlitelighting.co.uk

Generated on: 15/08/2022 7:40am
Produced by Tamlite Lighting

Tamlite Lighting
Data Sheet

Photometrics

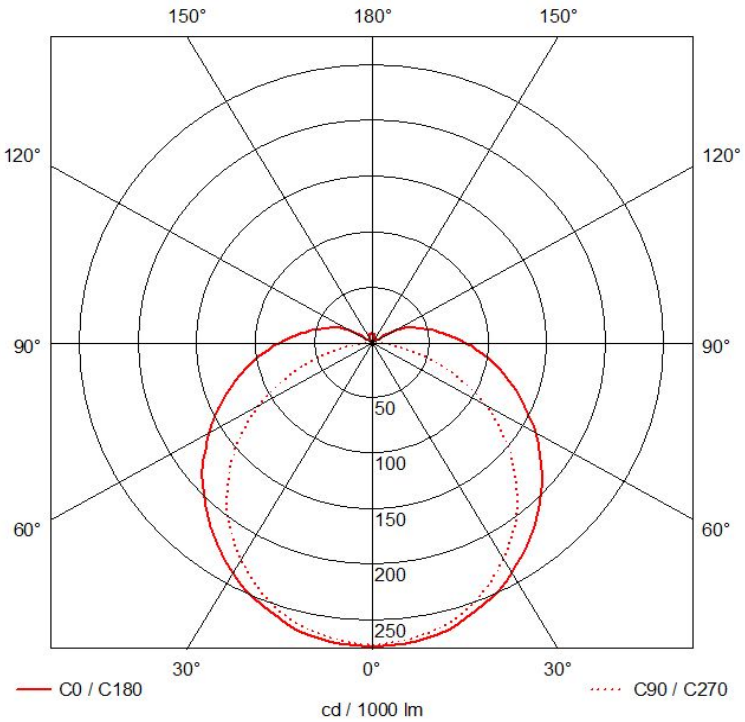

Dimensions

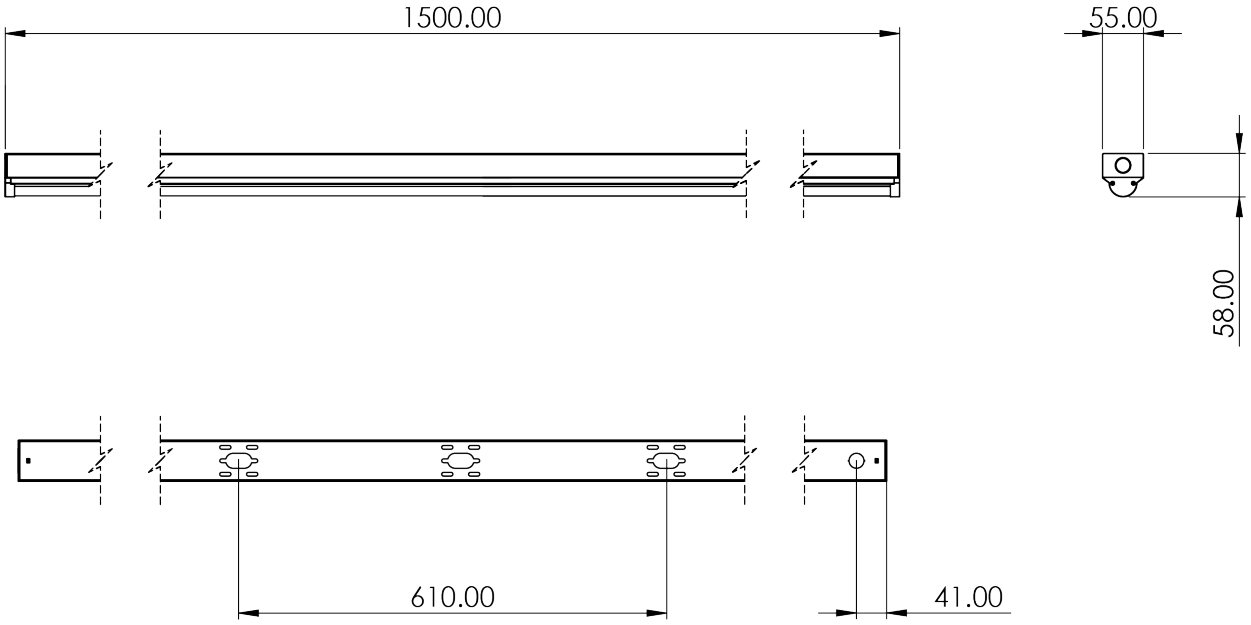

Tamlite Technical
Stafford Park 12
Telford, Shropshire,
TF3 3BJ

T: +44 (0)1952 292441
E: technical@tamlite.co.uk
W: www.tamlitelighting.co.uk