Tamlite Lighting
Data Sheet

Order Code: TDMA250NW

i3 Recessed Adjustable Downlight 18W - Fixed Output - 4000K



Features

- Suitable for retail applications
- Fully adjustable up to 350° rotation and 45° tilt
- Polished aluminium reflector
- CRI: Ra>80
- High efficiency LED module with remote driver

Construction

- Die-cast aluminium body finished in white (RAL 9010)
- Remote driver
- Supplied in neutral white (4000K) LED

To Specify

i3 Recessed Adjustable Downlight 18W - Fixed Output - 4000K as per Tamlite i3 range.

IP20 IK04 7 YRS

Technical Data

General

Luminaire Wattage (W)	18
Weight (kg)	0.95
Operating Temperature (°C)	0° to 25°

Light Output

Lumens (lm)	2,500
Efficacy (lm/W)	139
Beam Angle (FWHM°)	24

Life

L90 Lifetime (HRS)	57000
L80 Lifetime (HRS)	60000
L70 Lifetime (HRS)	60000

Electrical

Rated Input Current (A)	0.08
Power Factor (pf)	0.95
Input Voltage Range (VAC)	220 to 240
Inrush Current Peak (A)	204
Surge Protection (kV)	1
Total Harmonic Distortion (THD)	<8%
Output LF Ripple	5%
Conductor Size (mm)	0.2 to 1.5
Terminal Type	2-pole grip-wire

LED

CCT (K)	4000
CRI	80
Macadam Elipses	<3

Driver

Driver Current (mA)	475
Forward Voltage (V)	32.8

Tamlite Technical
Stafford Park 12
Telford, Shropshire,
TF3 3BJ

T: +44 (0)1952 292441
E: technical@tamlite.co.uk
W: www.tamlite.co.uk

Tamlite Lighting
Data Sheet

Photometrics

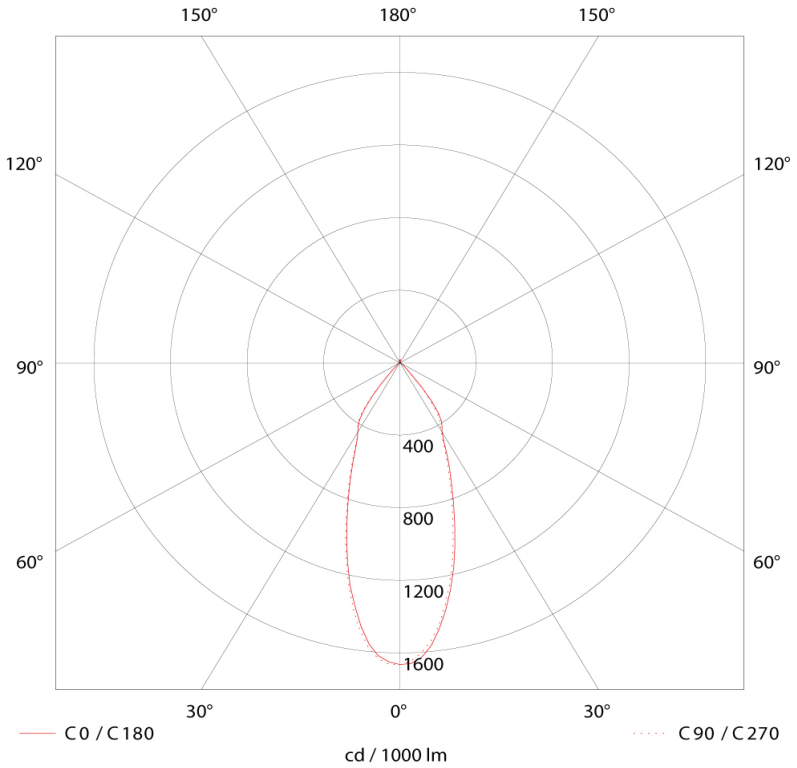

Dimensions

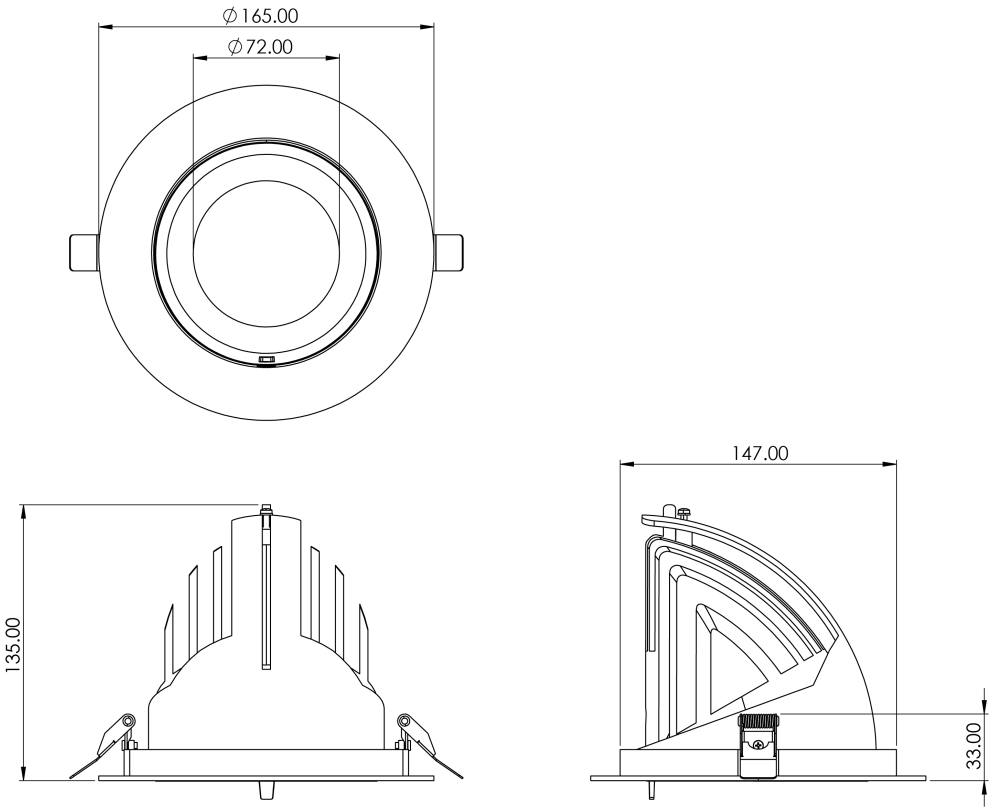

Tamlite Technical
Stafford Park 12
Telford, Shropshire,
TF3 3BJ

T: +44 (0)1952 292441
E: technical@tamlite.co.uk
W: www.tamlite.co.uk