Data sheet | Item number: 852-1200

SFP Module 1000BASE; SX Multi-Mode 850 nm LC; 0.55 km; Extended temperature range; DDM; silver-colored

www.wago.com/852-1200

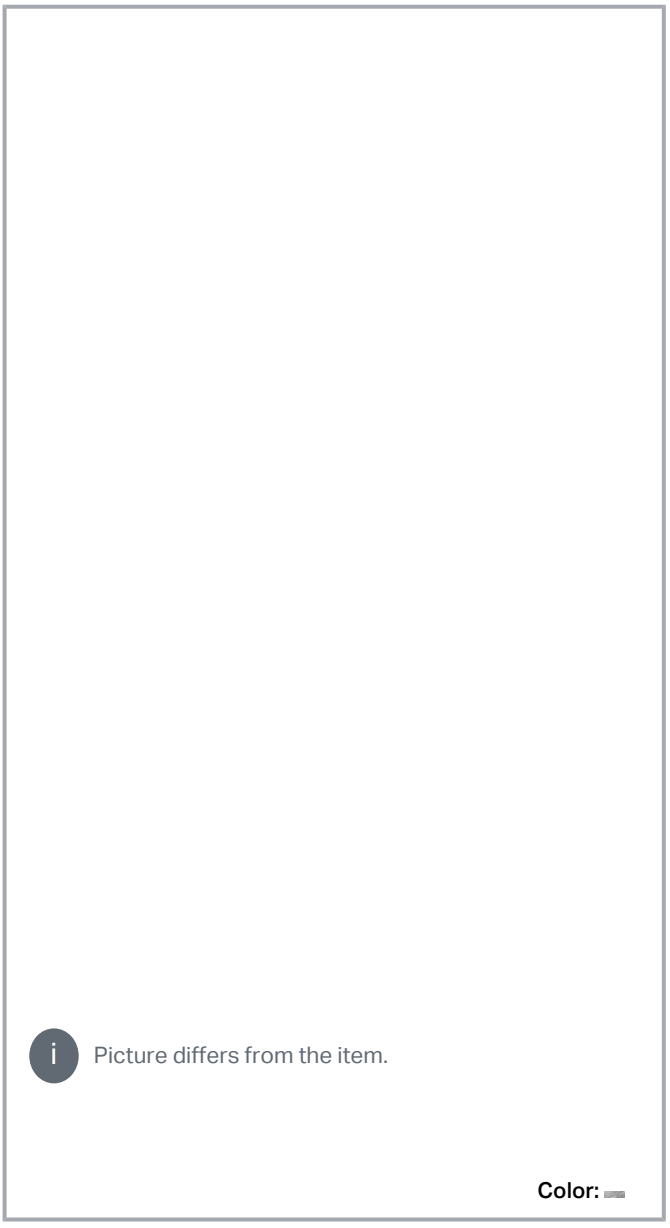

Picture differs from the item.

Color:

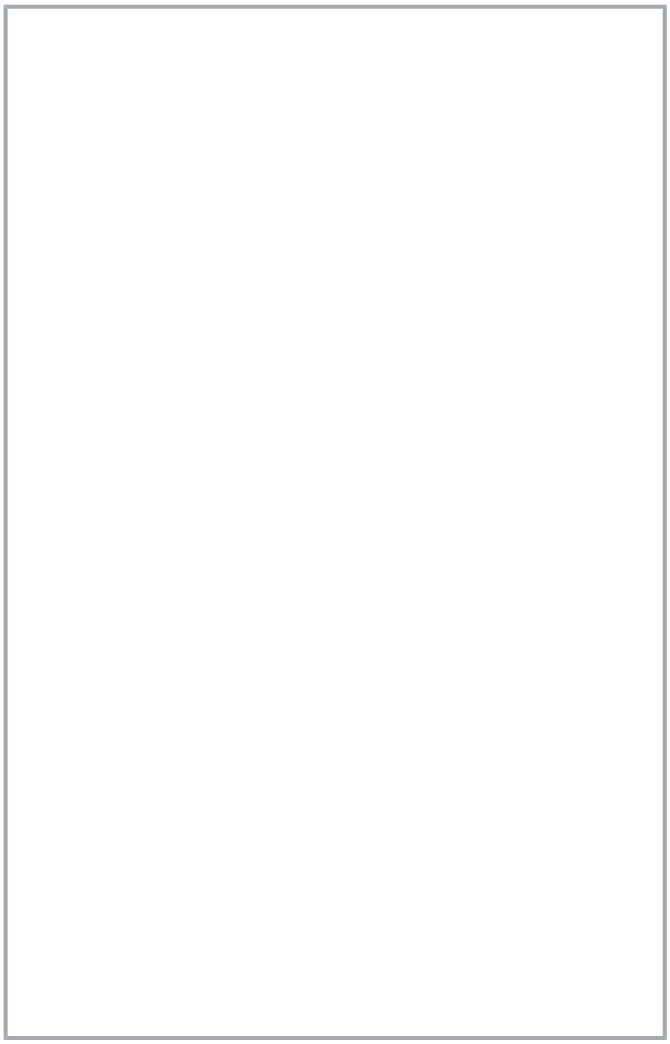

Subject to changes. Please also observe the further product documentation!

WAGO GmbH & Co. KG
Hansastr. 27
32423 Minden
Phone: +49571 887-0 | Fax: +49571 887-169
Email: info.de@wago.com | Web: www.wago.com

Do you have any questions about our products?
We are always happy to take your call at +49 (571) 887-44222.

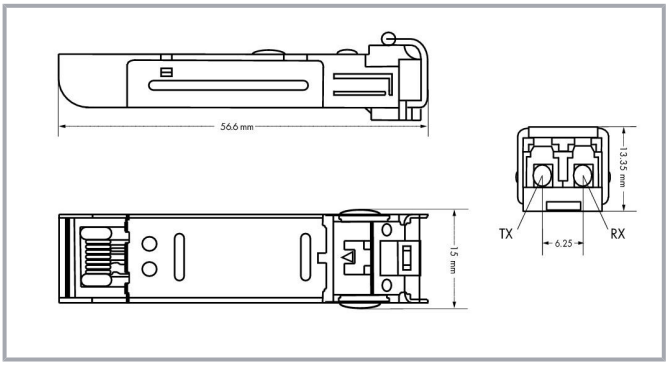

Item description

Features:

- Duplex LC optical connector
- Small Form-Factor Pluggable (SFP) industry-standard design
- Compliant with IEEE802.3z Gigabit ETHERNET Standard
- Differential LVPECL inputs and outputs
- Power supply: 3.3 V
- TTL signal detect indicator
- Hot-pluggable capability

Data

Technical data

Optical fiber type	Multi-mode

Connection data

Connection technology: communication/fieldbus	1 x SFP; LC fiber-optic connector
Connection requirement, permissible cable length	550 m
Connection requirement (permissible cable type)	Multi-mode fiber 50/125 µm; Wavelength: 850 nm
Connection requirement, permissible cable length (2)	300 m
Connection requirement, permissible cable type (2)	Multi-mode fiber 62.5/125 µm; Wavelength: 850 nm

Physical data

Width	13.4 mm / 0.528 inch
Height	13.3 mm / 0.524 inch
Depth	56.6 mm / 2.228 inch

Subject to changes. Please also observe the further product documentation!

WAGO GmbH & Co. KG
Hansastr. 27
32423 Minden
Phone: +49571 887-0 | Fax: +49571 887-169
Email: info.de@wago.com | Web: www.wago.com

Do you have any questions about our products?
We are always happy to take your call at +49 (571) 887-44222.

Mechanical data

Weight	17 g
Color	silver-colored

Environmental requirements

Surrounding air temperature (operation)	-40 … +85 °C
Surrounding air temperature (storage)	-40 … +85 °C

Commercial data

PU (SPU)	1 Stück
Packaging type	box
Country of origin	TW
GTIN	4055143394161
Customs tariff number	85176200000

Approvals / Certificates

Country specific Approvals

Logo	Approval	Additional Approval Text	Certificate name
	EAC Brjansker Zertifizierungsstelle	TP TC 020/2011	EAC RU C-DE.AM02.B.00087/19

Downloads

Documentation

Bid Text

852-1200 X81 - Datei	19 Feb 2019	xml 4.1 kB	Download
852-1200 doc - Datei	9 Oct 2017	doc 26.6 kB	Download

Additional Information

Disposal; Electrical and electronic equipment, Packaging	V 1.0.0	pdf 265.8 kB	Download

Subject to changes. Please also observe the further product documentation!

WAGO GmbH & Co. KG
Hansastr. 27
32423 Minden
Phone: +49571 887-0 | Fax: +49571 887-169
Email: info.de@wago.com | Web: www.wago.com

Do you have any questions about our products?
We are always happy to take your call at +49 (571) 887-44222.

CAD/CAE-Data

CAE data

EPLAN Data Portal 852-1200	URL	Download
WSCAD Universe 852-1200	URL	Download

Environmental Product Compliance

Compliance Search

Environmental Product Compliance 852-1200 SFP Module 1000BASE; SX Multi-Mode 850 nm LC; 0.55 km; Extended temperature range; DDM; silver-colored	URL	Download

Installation Notes

Subject to changes. Please also observe the further product documentation!

WAGO GmbH & Co. KG
Hansastr. 27
32423 Minden
Phone: +49571 887-0 | Fax: +49571 887-169
Email: info.de@wago.com | Web: www.wago.com

Do you have any questions about our products?
We are always happy to take your call at +49 (571) 887-44222.